ภาคผนวก ข-6

ขั้นตอนการควบคุมมลพิษจากปล่องระบายอากาศ

ขั้นตอนการควบคุมมลพิษจากปล่องระบายอากาศ

ลำดับ	Flow Diagram	ผู้รับผิดชอบ	หมายเหตุ
1	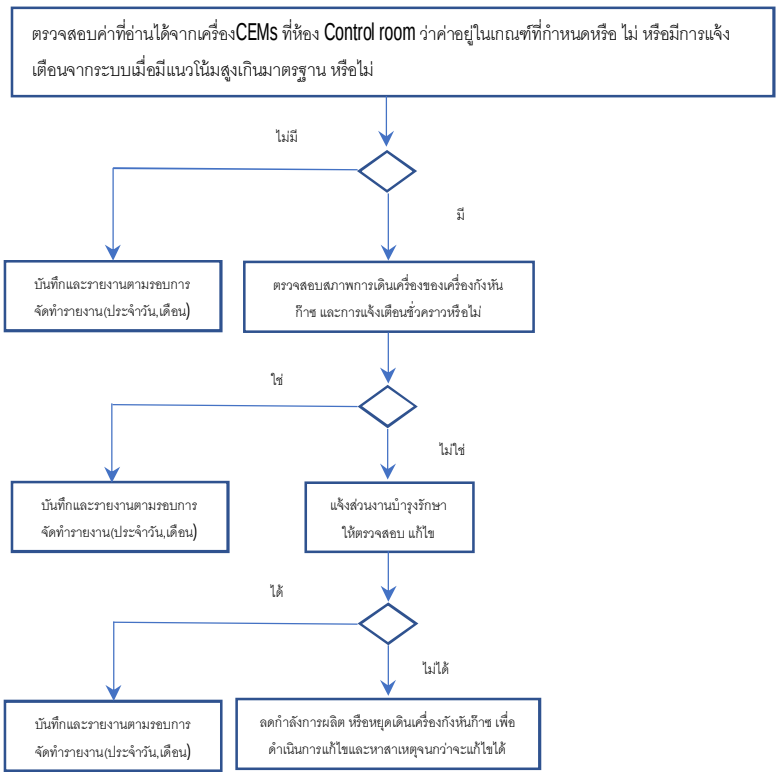	Shift leader	- NOx 60 ppm - SO2 6 ppm - TSP 28 mg/m3 - คิดที่สภาวะปรกติ อุณหภูมิ 25 องศาเซลเซียส ความดัน 1 บรรยากาศ ปริมาณอ็อกซิเจนส่วนเกิน ในการเผาไหม้ร้อยละ 7
2		Shift leader	- ในช่วงการเปลี่ยนแปลงโหลดอาจมีแนวโน้มสูง หรือต่ำในระยะสั้นๆ - รายงานตามรูปแบบที่บริษัทฯ กำหนด -เครื่องกังหันก๊าซสามารถ ปรับแต่งได้บ้าง แต่ได้ออกแบบหัวเผาให้เป็นแบบ dry low NOx ทำให้ในช่วงกำลังผลิตไฟฟ้าของเครื่องกังหันก๊าซ ค่า emission ไม่เกินมาตรฐานกำหนด
3		Shift leader/ Maintenance	-การแจ้งตรวจสอบ/ซ่อมในระบบ SAP - รายงานตามรูปแบบที่บริษัทฯ กำหนด
4		Shift leader/ Maintenance	- กรณีที่เกิดจากเครื่องมือวัดค่า emission error ให้คงกำลังผลิตของเครื่องกังหันก๊าซไว้ไม่เกินกำลังผลิต เทียบกับค่าเดิมช่วงที่มีการทวนสอบ CEMs และแจ้งหน่วยงานที่เกี่ยวข้องทราบ

ภาพแสดงหน้าจอที่ห้องควบคุมใช้สำหรับใช้ตรวจสอบ

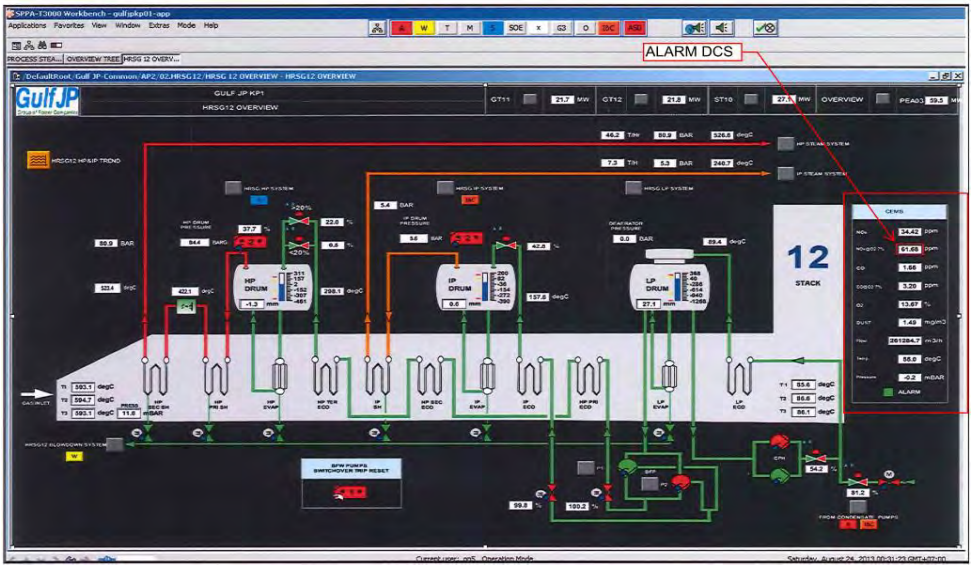

ภาคผนวก ข-7

เอกสารการออกแบบระบบ Dry Low NO_x Combustion

This document is issued in Pulse.

We reserve all rights in this document and in the information contained therein. Reproduction, use or disclosure to third Parties without express authority is strictly forbidden. © Siemens Industrial Turbomachinery AB

Table of Contents

PURPOSE OF THE SYSTEM 2
GENERAL DESCRIPTION OF THE SYSTEM 2
MAIN COMPONENTS 3
- INLET HOUSING 3
- COMPRESSOR (FIFTEEN STAGES) 5
- COMBUSTOR (ANNULAR TYPE) 6
- TURBINE (THREE STAGES) 8
- BEARINGS 10
- COOLING AND SEALING AIR 11

COMPONENTS 12
- TEST INSTRUMENTATION 21

FUNCTION 22
- START UP 22
- CONTINUOUS OPERATION 22
- TURBINE STOP 22
- BARRING 22
- STAND STILL 23

DISTURBANCES 23
- GAS TURBINE TRIP 23
- GENERATOR BREAKER TRIP 23
- LOSS OF POWER SUPPLY 23
- SYSTEM FAULTS 23
- OTHER FAULTS 23

TECHNICAL SPECIFICATION 24
- DESIGN CRITERIA AND STANDARDS 24
- DIMENSIONING DATA 24
- INSTALLATION 24
- COMPONENT DATA 24

INDEX OF COMPONENTS 25

This document is issued in Pulse.

We reserve all rights in this document and in the information contained therein. Reproduction, use or disclosure to third Parties without express authority is strictly forbidden. © Siemens Industrial Turbomachinery AB

PURPOSE OF THE SYSTEM

The gas turbine generates a flow of pressurised hot gas which is converted into mechanical energy, which is driving a generator via a gear box.

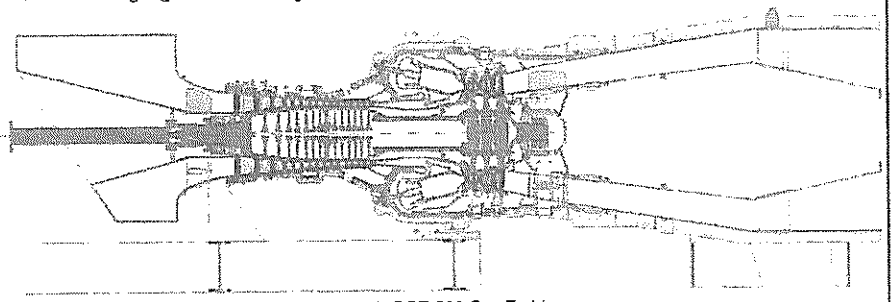

Figure 1, SGT-800 Gas Turbine

GENERAL DESCRIPTION OF THE SYSTEM

Refer to P&ID: 2914483

The SGT-800 Gas Turbine operates in a simple open cycle with straight air and gas flow through the turbine. It can be divided into three main sections, the compressor, the combustor and the turbine. The compressor draws filtered air from the ambient and compresses it. The compressed air enters the combustor where it is heated by the fuel. The hot gas is expanded through the turbine which drives the compressor and external load. The hot gas is exhausted in the exhaust diffuser. The three main sections are mechanically interconnected, but are modularised and can be handled separately. The output of the unit is controlled by the firing temperature and the gas flow through the turbine. The continuous rotor speed is 6600 rpm.

This document is issued in Pulse.

MAIN COMPONENTS

Inlet housing

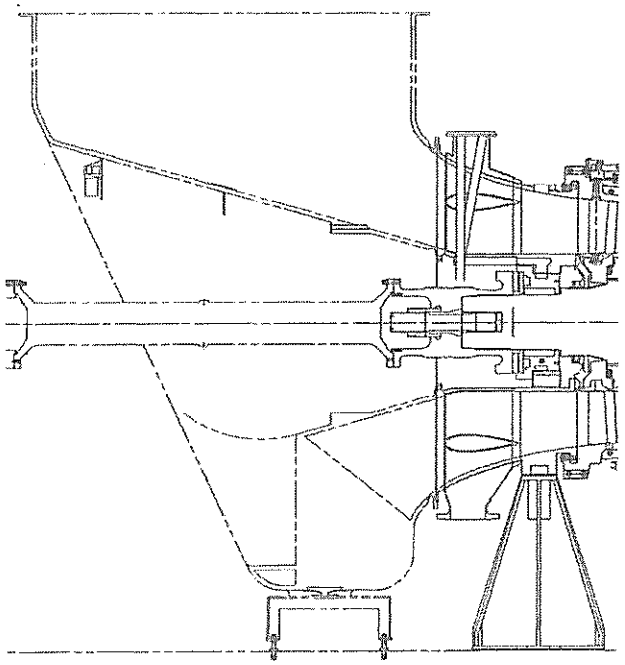

Figure 2, Inlet housing section

The inlet housing consists of the inlet casing and the inlet piece which smoothly directs the incoming air to the first compressor stage. The inlet casing is equipped with a view glass and made of composite which is light and has a built in noise reduction capability. The inlet housing also contains the compressor wash nozzles, see system description for compressor washing system SDB.
The inlet piece contains bearing housing no.1 and the quill shaft, connecting the gearbox to the rotor. The inlet piece has seven load-carrying hollowed struts, which also contain lube oil pipes to the bearings as well as electric cables for the speed and optional vibration transducers. They also convey seal- and oil ventilation air. Standard vibration transducers are located on the outside of the casing. Absolute axial displacement of the rotor is measured. The inlet housing is bolted to the compressor casing.

We reserve all rights in this document and in the information contained therein. Reproduction, use or disclosure to third parties without express authority is strictly forbidden. © Siemens Industrial Turbomachinery AB

This document is issued in Pulse.

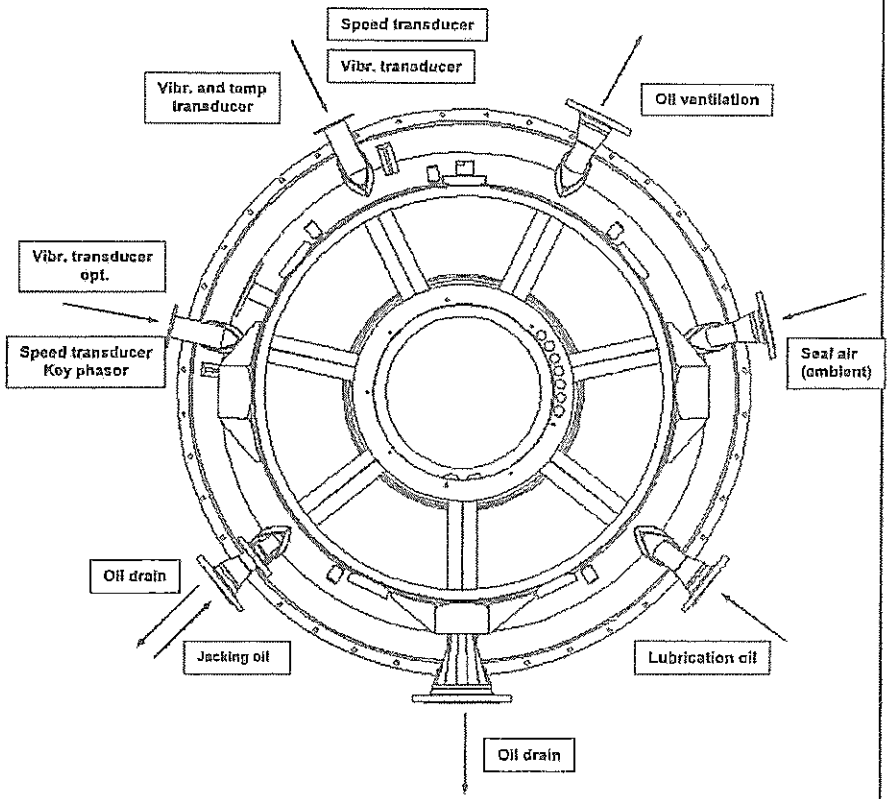

Figure 3, Inlet piece

We reserve all rights in this document and in the information contained therein. Reproduction, use or disclosure to third parties without express authority is strictly forbidden. © Siemens Industrial Turbomachinery AB

This document is issued in Pulse.

Compressor (fifteen stages)

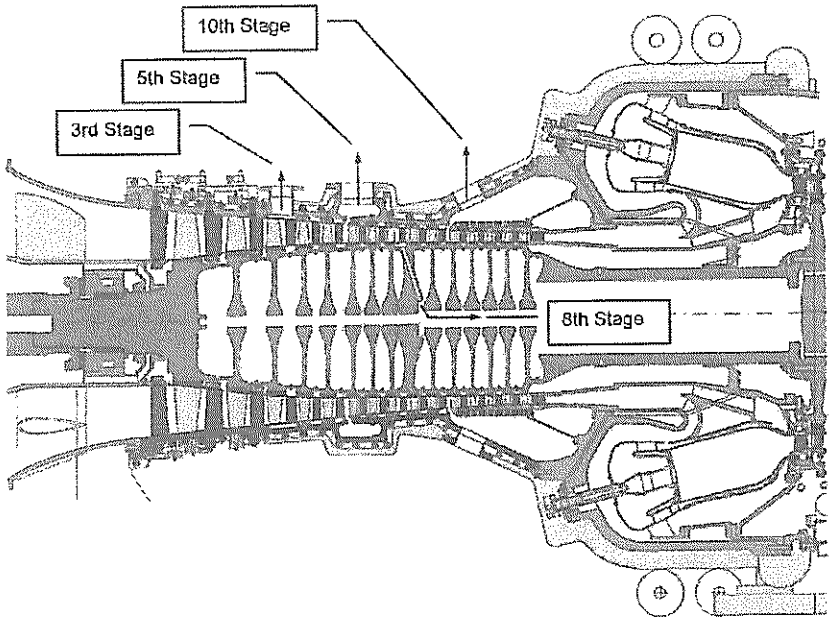

Figure 4, Compressor section

The fifteen stage axial flow compressor has three major parts, a rotor, a pressurised casing covering the first ten stages and an inner casing carrying the rear stages.

The first three rows of guide vanes are variable, actuated by a spindle control mechanism and a variable speed electrical motor.
There are holes and slots for extracting air downstream, after stage 3, 5, 8 (internal) and 10. Regarding the use of extraction air from stage 3, 5 and 10, see system MBH10. The air cooling cavities between turbine discs 1/2 and 2/3 respectively, as well as cooling for the second blade, is supplied from the 8th stage extraction.
The compressor casing, covering the whole compressor section, is vertically split to facilitate service and replacement of components. The casing carries the guide vanes for the ten first stages and contains the rear compressor guide vane carrier.
The rear inner compressor stator, that carries the guide vane stages 11-14, is made material with low thermal expansion to allow small tip clearances and high performance.
The guide vanes have a segmented design and are fitted in the casing by tangential groves.
The compressor has a total of eighteen plugged boroscope holes. Boroscope inspection can be performed on all stages except stage 7 and 15.

We reserve all rights in this document and in the information contained therein. Reproduction, use or disclosure to third parties without express authority is strictly forbidden.
© Siemens Industrial Turbomachinery AB

This document is issued in Pulse.

The compressor rotor is built up from a number of fully electron beam welded discs, onto which the intermediate shaft is welded. The first four rotor blades are made from chromium steel in order to be corrosion resistant. The blading is uncoated and has a high surface smoothness for low deterioration. The rotor blades are fitted to the disc in dove tail shaped slots.

Combustor (annular type)

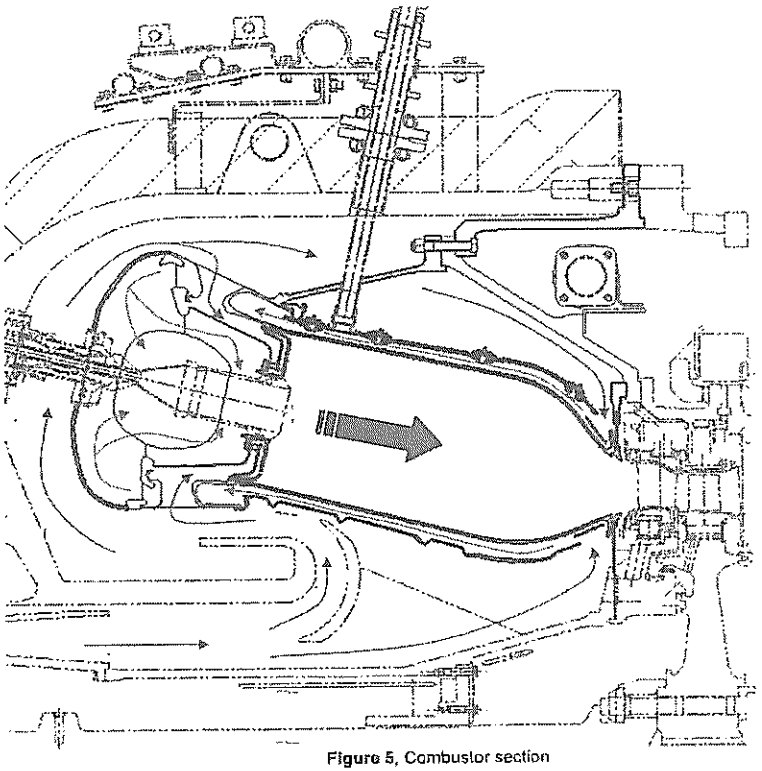

Figure 5, Combustor section

The combustor consists of the central casing and the combustion chamber.
The central casing is a circular design containing the compressor diffuser, guiding and dividing the flow from the compressor discharge around the combustion chamber, to the cooling air entrances.
The combustion chamber is of annular type (covering the whole circumference). The operating principle of the combustion chamber wall cooling is similar to a counter flow heat exchanger. The air enter through slots near the turbine inlet, cools the combustion chamber wall by convection, enters the burners through a hood and mixes with fuel and combustion takes place. The hot combustion gases then expand through the turbine. The cooling of both the liners and the front panel (were the

We reserve all rights in this document and in the information contained therein. Reproduction, use or disclosure to third parties without express authority is strictly forbidden.
© Siemens Industrial Turbomachinery AB

This document is issued in Pulse.

burners is located) is based on a non-dilutive design. This means that all air goes through the burners and takes part in the combustion. However, a small portion of the air enters the combustor through the damping holes on the front panel to reduce combustion dynamics. Fuel is injected into the burners by 30 fuel injectors with full dual fuel Dry Low Emission (DLE) capabilities.
Burner 26 is used as a ignition burner and the ignition is provided by a spark igniter and a spark plug. During ignition burner 26 are supplied with ignition gas from a separate system. When the ignition flame is detected by the flame detector fuel is supplied to the remaining burners and burner 26 is switched from the ignition gas system to the main fuel system.

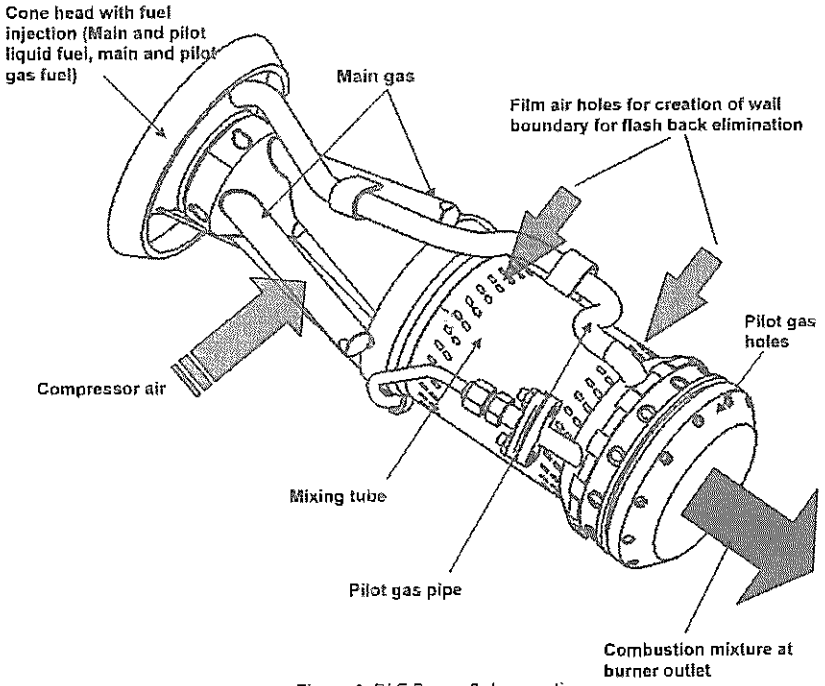

Figure 6, DLE Burner 3rd generation

There are two flame detectors in the combustion chamber. The flame detectors are located on the upper half of the annulus, both indicating main flame. There are a total of 44 access holes for inspection of the combustor.
When operating on gaseous or liquid fuels, the burners are working according to the lean premixed combustion principle. This principle will ensure a low flame temperature and the formation of small amount of thermal nitrite oxides and carbon monoxide. Injection of steam or water is not required from combustion point of view and is not a power boosting option for this gas turbine.

We reserve all rights in this document and in the information contained therein. Reproduction, use or disclosure to third Parties without express authority is strictly forbidden. © Siemens Industrial Turbomachinery AB

This document is issued in Pulse.

The hot gas side of the combustion chamber is protected by Thermal Barrier Coating (TBC) for life extension.
At the combustor wall there are 3 pipes connected to 3 sensors outside the central casing. The sensors monitor/measure the fluctuations (pulsations) in the dynamic pressure. For more information, see system description MBX – Pulsation monitoring system.

Turbine (three stages)

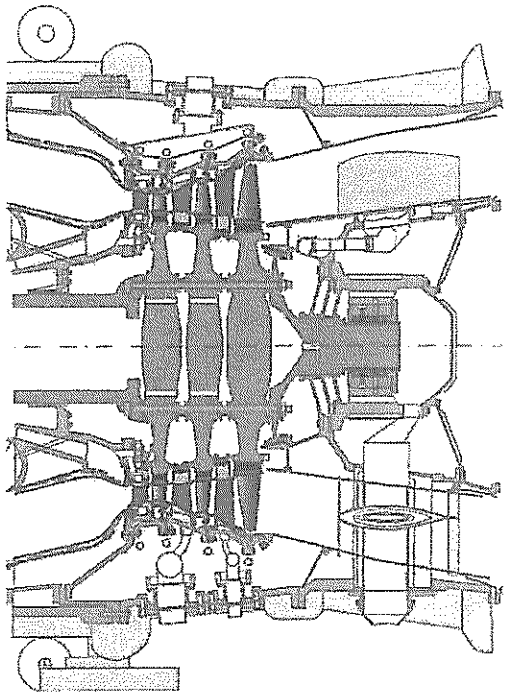

Figure 7, Turbine section

The three-stage turbine comprises:

- the stator which is carrying the guide vanes
- the rotor assembly, bolted to the intermediate shaft
- the outlet casing

The guide vanes inner surfaces have honeycomb seals to prevent gas leakage, while outside first and second blade abradable seals are used to withstand slight tip rubbing. A honeycomb seal is used for the third blade.

We reserve all rights in this document and in the information contained therein. Reproduction, use or disclosure to third Parties without express authority is strictly forbidden. © Siemens Industrial Turbomachinery AB

This document is issued in Pulse.

The rotor blades as well as the guide vanes are precision cast. Stage one and two are internally cooled and stage one has a film cooling (see section "Cooling and sealing air").
The surfaces on the first and second stage are coated for corrosion protection and life extension.
Blades are unshrouded, except for stage three.
The third guide vane is a double vane while stage one and two are single.
The rotor blades are fitted to the disc in fir-tree shaped slots.

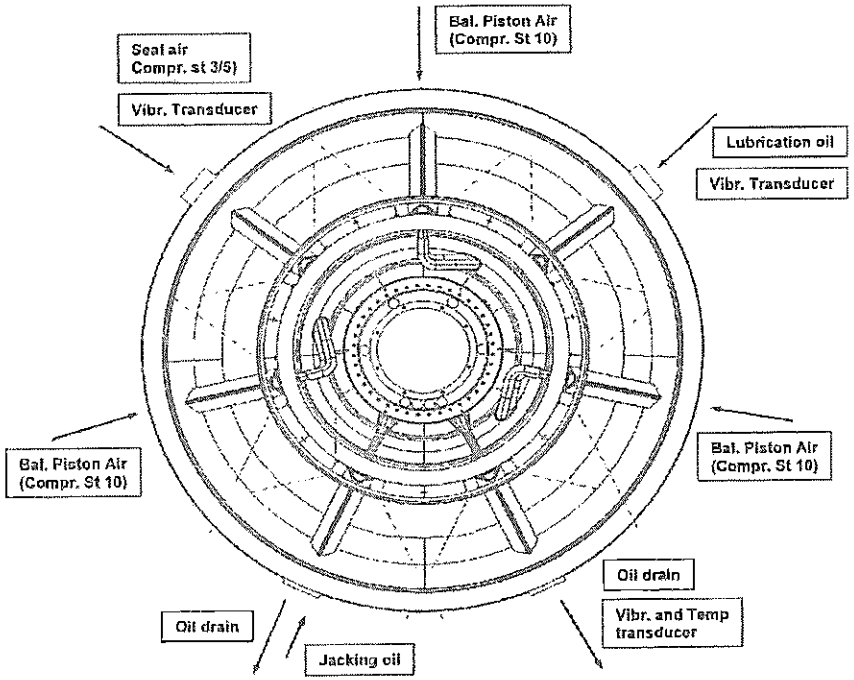

Figure 8, Turbine outlet casing

The turbine stator has a cylindrical ring design. Operating at higher temperatures the casing circularity can be maintained and the turbine running clearances and aerodynamic losses be kept at a minimum. The turbine stator flanges are cooled to reduce clearance and improve efficiency.

The outlet casing contains bearing housing no.2 and has seven insulated load-carrying hollowed struts, which also contain lube oil pipes to the bearings as well as electric cables for vibration transducers. They are also used to convey seal air.
There is no separate oil mist pipe, instead the waste air is taken out by the oil drain.
The outlet casing is mounted to the turbine casing and connected to the turbine diffuser via a bellow.

We reserve all rights in this document and in the information contained therein. Reproduction, use or disclosure to third Parties without express authority is strictly forbidden. © Siemens Industrial Turbomachinery AB

This document is issued in Pulse.

Bearings

The gas turbine rotor is carried by two bearings, no 1 and 2 numbered from the inlet to the exhaust. Both bearing casings are kept sub atmospheric.
Bearing no 1 is a combined thrust bearing and journal bearing both of tilting pad type. Bearing no 2 is a journal bearing of tilting pad type. The journal bearings are both of the 5-segment type and the thrust bearing has 10 pads. The thrust bearing has also 17 smaller support pads on the opposite side.
The bearings are equipped with temperature sensors and vibration pick-ups, the latter being horizontal and vertically fitted on the outside of the bearing housing.
During operation, oil is continuously supplied to the bearings. Return oil from the bearing casings is led back to the lube oil tank by gravity.
See also the lubrication oil system description, MBV.

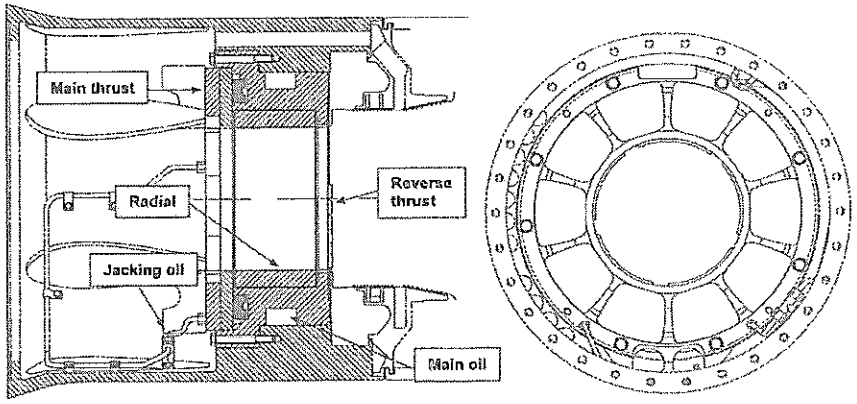

Figure 9, Bearing #1 in housing

We reserve all rights in this document and in the information contained therein. Reproduction, use or disclosure to third Parties without express authority is strictly forbidden. © Siemens Industrial Turbomachinery AB

This document is issued in Pulse.

Cooling and sealing air

At a number of locations air from the compressor is used for cooling and sealing purposes. The air is taken from six different pressure levels, depending of use, in order to minimise process losses. Please also see the cooling and sealing air system description, MBH Cooling and Sealing Air System. Cooling air is used for cooling the turbine casing, vanes, blades and discs. Sealing air is used to prevent hot gases from entering or oil mist from leaking out from the bearing housing. In order to decrease the thrust load on bearing no 1, a balancing piston, fed by air from compressor stage 10, has been designed downstream turbine disc 3.

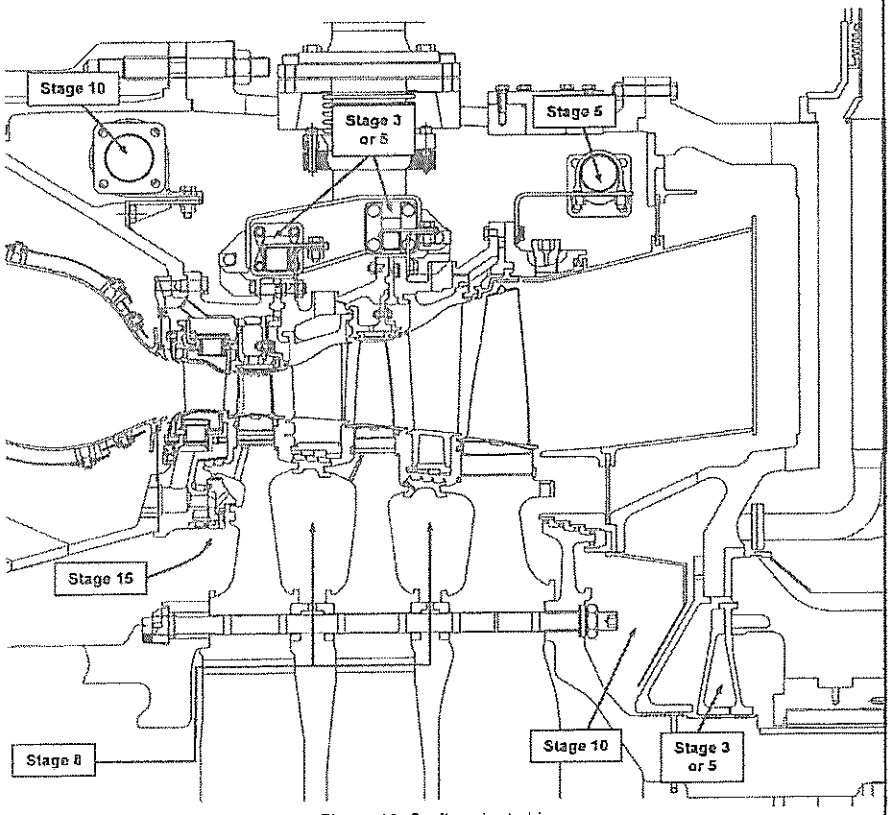

Figure 10, Cooling air - turbine

We reserve all rights in this document and in the information contained therein. Reproduction, use or disclosure to third parties without express authority is strictly forbidden. © Siemens Industrial Turbomachinery AB

This document is issued in Pulse.

Components

- Compressor inlet guide vane actuator motor unit.
  MBA10AE005
  An AC-servo motor positions the variable compressor guide vanes via an actuator.

- Ignition system
  MBA10AV005
  The ignition box for the spark plug igniter of the combustion chamber. The spark plug is ignited by the ignition exciter.

- Axial displacement
  MBA10CG005
  The transducer is continuously monitoring the axial position of the rotor. Absolute distance relative bearing measured.

- Axial displacement
  MBA10CG010
  The transducer is continuously monitoring the axial position of the rotor. Absolute distance relative bearing measured.

- Key phasor
  MBA10CG015
  The key phasor detects the rotor angle during balancing.

- Axial displacement
  MBA10CG025
  The transducer is continuously monitoring the axial position of the rotor. Absolute distance relative bearing measured.

  Rev C, Start
- Compressor inlet guide vane positioning sensor (RVDT)
  MBA10CG030
  The position of the VGV is measured with an RVDT (Rotary Variable Differential Transformer).
  Rev C, Stop

- Diff Pressure transmitter, compressor inlet
  MBA10CP005
  Diff. pressure measurements over the inlet piece for calculation of compressor inlet mass flow.

- Pressure transmitter, compressor inlet
  MBA10CP010
  Pressure level inside the inlet housing for calculation of compressor inlet mass flow.

We reserve all rights in this document and in the information contained therein. Reproduction, use or disclosure to third parties without express authority is strictly forbidden. © Siemens Industrial Turbomachinery AB

This document is issued in Pulse.

We reserve all rights in this document and in the information contained therein. Reproduction, use or disclosure to third parties without express authority is strictly forbidden.
© Siemens Industrial Turbomachinery AB

- Pressure transmitter, compressor discharge pressure.
  MBA10CP015
  The transducer is continuously monitoring the pressure in the central casing, used in the control loop of the gas turbine. Used for calculation of the turbine inlet temperature.

- Pressure transmitter, compressor discharge pressure.
  MBA10CP016
  The transducer is continuously monitoring the pressure in the central casing, used in the control loop of the gas turbine. Used for calculation of the turbine inlet temperature.

  Pressure transmitter, compressor discharge pressure.
  MBA10CP017
  The transducer is continuously monitoring the pressure in the central casing, used in the control loop of the gas turbine. Used for calculation of the turbine inlet temperature.

- Pressure transmitter, combustor
  MBA10CP030
  The transducer is continuously monitoring the pressure in the combustion chamber.

- Pressure transmitter, front face disc 1
  MBA10CP035
  The transducer is continuously monitoring the pressure upstream of turbine disc 1 to ensure cooling air feed to turbine blade 1.

- Diff Pressure transmitter, turbine exhaust
  MBA10CP040
  Diff. pressure measurements between the turbine exhaust and surrounding.

- Diff Pressure transmitter, turbine exhaust
  MBA10CP041
  Diff. pressure measurements between the turbine exhaust and surrounding.

- Diff Pressure transmitter, turbine exhaust
  MBA10CP042
  Diff pressure measurements between the turbine exhaust and surrounding.

- Pressure transmitter, turbine exhaust
  MBA10CP045
  The transducer is continuously monitoring the over pressure in the turbine exhaust. It is used for calculating the T5 (turbine inlet temp).

- Pressure switch, compressor surge protection
  MBA10CP050
  The diff. pressure switch will be activated by the back flow of air through the inlet housing during surge.

- Pressure switch, compressor surge protection
  MBA10CP055
  The diff. pressure switch will be activated by the back flow of air through the inlet housing during surge.

This document is issued in Pulse.

We reserve all rights in this document and in the information contained therein. Reproduction, use or disclosure to third parties without express authority is strictly forbidden.
© Siemens Industrial Turbomachinery AB

- Pressure switch, compressor surge protection
  MBA10CP060
  The diff. pressure switch will be activated by the back flow of air through the inlet housing during surge.

- Diff Pressure transmitter, inlet system
  MBA10CP065
  The diff. pressure over the inlet filter is continuously monitored to detect clogging.

- Pressure transmitter, inlet system
  MBA10CP070
  The diff. pressure over the inlet filter is continuously monitored to detect clogging.

- Pressure transmitter, inlet system
  MBA10CP075
  The diff. pressure over the inlet filter is continuously monitored to detect clogging.

- Dynamic probe, combustor pulsation
  MBA10CP085
  The dynamic head in the combustor is continuously monitored.

- Dynamic probe, combustor pulsation
  MBA10CP090
  The dynamic head in the combustor is continuously monitored.

- Dynamic probe, combustor pulsation
  MBA10CP095
  The dynamic head in the combustor is continuously monitored.

- Flame detector
  MBA10CQ005
  The flame detector indicates flame during start up and detects flame out during operation.

- Flame detector
  MBA10CQ010
  The flame detector indicates flame during start up and detects flame out during operation.

- Speed transducer
  MBA10CS005
  The transducer measures continuously the rotating speed of the rotor, and is used as input to the control loop of the gas turbine. Controls the rotor speed to 6607 rpm (50 or 60 Hz).

- Speed transducer
  MBA10CS010
  The transducer measures continuously the rotating speed of the rotor, and is used as input to the control loop of the gas turbine. Controls the rotor speed to 6607 rpm (50 or 60 Hz).

- Speed transducer
  MBA10CS015

The transducer measures continuously the rotating speed of the rotor. Overspeed protection.

- Speed transducer
  MBA10CS020
  The transducer measures continuously the rotating speed of the rotor. Overspeed protection.

- Speed transducer
  MBA10CS030
  The transducer measures continuously the rotating speed of the rotor. Overspeed protection.

- Temperature transmitter, bearing temperature
  MBA10CT005
  The PT100 is continuously monitoring the temperature of radial bearing no1.

- Temperature transmitter, bearing temperature
  MBA10CT010
  The PT100 is continuously monitoring the temperature of radial bearing no1.

- Temperature transmitter, bearing temperature
  MBA10CT015
  The PT100 is continuously monitoring the temperature of axial thrust bearing no1.

- Temperature transmitter, bearing temperature
  MBA10CT020
  The PT100 is continuously monitoring the temperature of axial thrust bearing no1.

- Temperature transmitter, compressor inlet
  MBA10CT025
  The PT100 is continuously monitoring the temperature at the compressor inlet. The transmitter is protecting the gas turbine from operation outside the design limits. The signal is used as input to the control loop of the gas turbine to calculate the inlet mass flow, the PFR (pilot fuel ratio) and the STC (start control)

Rev C, Start

- Temperature transmitter, compressor inlet
  MBA10CT026
  The PT100 is continuously monitoring the temperature at the compressor inlet. The transmitter is protecting the gas turbine from operation outside the design limits. The signal is used as input to the control loop of the gas turbine to calculate the inlet mass flow, the PFR (pilot fuel ratio) and the STC (start control)

- Temperature transmitter, compressor inlet
  MBA10CT027
  The PT100 is continuously monitoring the temperature at the compressor inlet. The transmitter is protecting the gas turbine from operation outside the design limits. The signal is used as input to the control loop of the gas turbine to calculate the inlet mass flow, the PFR (pilot fuel ratio) and the STC (start control)

Rev C, Stop

This document is issued in Pulse.

We reserve all rights in this document and in the information contained therein. Reproduction, use or disclosure to third Parties without express authority is strictly forbidden. © Siemens Industrial Turbomachinery AB

A 007 0474-B 00-03 MS Word 97

- Temperature transmitter, compressor outlet
  MBA10CT030
  The thermocouple is continuously monitoring the temperature at the compressor outlet. The transmitter is protecting the gas turbine from operation outside the design limits. The signal is used as input to the control loop of the gas turbine. Used for calculation of the turbine inlet temperature.

- Temperature transmitter, compressor outlet
  MBA10CT031
  The thermocouple is continuously monitoring the temperature at the compressor outlet. The transmitter is protecting the gas turbine from operation outside the design limits. The signal is used as input to the control loop of the gas turbine. Used for calculation of the turbine inlet temperature.

- Temperature transmitter, compressor outlet
  MBA10CT032
  The thermocouple is continuously monitoring the temperature at the compressor outlet. The transmitter is protecting the gas turbine from operation outside the design limits. The signal is used as input to the control loop of the gas turbine. Used for calculation of the turbine inlet temperature.

- Temperature transmitter, turbine stator
  MBA10CT035
  The thermocouple is continuously monitoring the temperature in the turbine stator flanges connecting stator ring 1 and 2. The transmitter indicates the function of the external stator cooling.

- Temperature transmitter, turbine stator
  MBA10CT040
  The thermocouple is continuously monitoring the temperature in the turbine stator flanges connecting stator ring 1 and 2.

- Temperature transmitter, turbine stator
  MBA10CT045
  The thermocouple is continuously monitoring the temperature in the turbine stator flanges connecting stator ring 1 and 2.

- Temperature transmitter, turbine stator
  MBA10CT050
  The thermocouple is continuously monitoring the temperature in the turbine stator flanges connecting stator ring 2 and 3.

- Temperature transmitter, turbine stator
  MBA10CT055
  The thermocouple is continuously monitoring the temperature in the turbine stator flanges connecting stator ring 2 and 3.

- Temperature transmitter, turbine stator
  MBA10CT060
  The thermocouple is continuously monitoring the temperature in the turbine stator flanges connecting stator ring 2 and 3.

This document is issued in Pulse.

We reserve all rights in this document and in the information contained therein. Reproduction, use or disclosure to third Parties without express authority is strictly forbidden. © Siemens Industrial Turbomachinery AB

A 007 0474-B 00-03 MS Word 97

This document is issued in Pulse.

We reserve all rights in this document and in the information contained therein. Reproduction, use or disclosure to third parties without express authority is strictly forbidden.
© Siemens Industrial Turbomachinery AB

- Temperature transmitter, between turbine stator and turbine casing
  MBA10CT065
  The thermocouple is continuously monitoring the temperature in the cavity between the turbine stator and the turbine casing.

- Temperature transmitter, vane inner shroud
  MBA10CT070
  The thermocouple is continuously monitoring the temperature in the seal region under the stage 2 vane.

- Temperature transmitter, vane inner shroud
  MBA10CT080
  The thermocouple is continuously monitoring the temperature in the seal region under the stage 2 vane.

- Temperature transmitter, bearing temperature
  MBA10CT090
  The PT100 is continuously monitoring the temperature of radial bearing no. 2.

- Temperature transmitter, bearing temperature
  MBA10CT095
  The PT100 is continuously monitoring the temperature of radial bearing no. 2.

- Temperature transmitter, turbine exhaust
  MBA10CT100
  The thermocouple is continuously monitoring the temperature in the turbine exhaust, used as input to the control loop of the gas turbine. The average value from MBA10CT100-175 limits the turbine exhaust temperature.

- Temperature transmitter, turbine exhaust
  MBA10CT105
  The thermocouple is continuously monitoring the temperature in the turbine exhaust, used as input to the control loop of the gas turbine. The average value from MBA10CT100-175 limits the turbine exhaust temperature.

- Temperature transmitter, turbine exhaust
  MBA10CT110
  The thermocouple is continuously monitoring the temperature in the turbine exhaust, used as input to the control loop of the gas turbine. The average value from MBA10CT100-175 limits the turbine exhaust temperature.

- Temperature transmitter, turbine exhaust
  MBA10CT115
  The thermocouple is continuously monitoring the temperature in the turbine exhaust, used as input to the control loop of the gas turbine. The average value from MBA10CT100-175 limits the turbine exhaust temperature.

This document is issued in Pulse.

We reserve all rights in this document and in the information contained therein. Reproduction, use or disclosure to third parties without express authority is strictly forbidden.
© Siemens Industrial Turbomachinery AB

- Temperature transmitter, turbine exhaust
  MBA10CT120
  The thermocouple is continuously monitoring the temperature in the turbine exhaust, used as input to the control loop of the gas turbine. The average value from MBA10CT100-175 limits the turbine exhaust temperature.

- Temperature transmitter, turbine exhaust
  MBA10CT125
  The thermocouple is continuously monitoring the temperature in the turbine exhaust, used as input to the control loop of the gas turbine. The average value from MBA10CT100-175 limits the turbine exhaust temperature.

- Temperature transmitter, turbine exhaust
  MBA10CT130
  The thermocouple is continuously monitoring the temperature in the turbine exhaust, used as input to the control loop of the gas turbine. The average value from MBA10CT100-175 limits the turbine exhaust temperature.

- Temperature transmitter, turbine exhaust
  MBA10CT135
  The thermocouple is continuously monitoring the temperature in the turbine exhaust, used as input to the control loop of the gas turbine. The average value from MBA10CT100-175 limits the turbine exhaust temperature.

- Temperature transmitter, turbine exhaust
  MBA10CT140
  The thermocouple is continuously monitoring the temperature in the turbine exhaust, used as input to the control loop of the gas turbine. The average value from MBA10CT100-175 limits the turbine exhaust temperature.

- Temperature transmitter, turbine exhaust
  MBA10CT145
  The thermocouple is continuously monitoring the temperature in the turbine exhaust, used as input to the control loop of the gas turbine. The average value from MBA10CT100-175 limits the turbine exhaust temperature.

- Temperature transmitter, turbine exhaust
  MBA10CT150
  The thermocouple is continuously monitoring the temperature in the turbine exhaust, used as input to the control loop of the gas turbine. The average value from MBA10CT100-175 limits the turbine exhaust temperature.

- Temperature transmitter, turbine exhaust
  MBA10CT155
  The thermocouple is continuously monitoring the temperature in the turbine exhaust, used as input to the control loop of the gas turbine. The average value from MBA10CT100-175 limits the turbine exhaust temperature.

This document is issued in Pulse.

We reserve all rights in this document and in the information contained therein. Reproduction, use or disclosure to third parties without express authority is strictly forbidden. © Siemens Industrial Turbomachinery AB

- Temperature transmitter, turbine exhaust
  MBA10CT160
  The thermocouple is continuously monitoring the temperature in the turbine exhaust, used as input to the control loop of the gas turbine. The average value from MBA10CT100-175 limits the turbine exhaust temperature.

- Temperature transmitter, turbine exhaust
  MBA10CT165
  The thermocouple is continuously monitoring the temperature in the turbine exhaust, used as input to the control loop of the gas turbine. The average value from MBA10CT100-175 limits the turbine exhaust temperature.

- Temperature transmitter, turbine exhaust
  MBA10CT170
  The thermocouple is continuously monitoring the temperature in the turbine exhaust, used as input to the control loop of the gas turbine. The average value from MBA10CT100-175 limits the turbine exhaust temperature.

- Temperature transmitter, turbine exhaust
  MBA10CT175
  The thermocouple is continuously monitoring the temperature in the turbine exhaust, used as input to the control loop of the gas turbine. The average value from MBA10CT100-175 limits the turbine exhaust temperature.

- Vibration transducer, bearing
  MBA10CY005
  The accelerometer is continuously monitoring the vibration in bearing no 1.

- Vibration transducer, bearing
  MBA10CY010
  The accelerometer is continuously monitoring the vibration in bearing no 2.

- Vibration transducer, bearing
  MBA10CY015
  The accelerometer is continuously monitoring the vibration in bearing no 2.

- Vibration transducer, bearing
  MBA10CY020
  The accelerometer is continuously monitoring the vibration in bearing no 2.

- Vibration transducer, bearing
  MBA10CY025
  The accelerometer is continuously monitoring the vibration in bearing no 1.

- Vibration transducer, bearing
  MBA10CY030
  The accelerometer is continuously monitoring the vibration in bearing no 1.

This document is issued in Pulse.

We reserve all rights in this document and in the information contained therein. Reproduction, use or disclosure to third parties without express authority is strictly forbidden. © Siemens Industrial Turbomachinery AB

- Air flow, calculated
  MBA10FF900
  Calculated compressor inlet mass flow based on dP measurements.

- Calculated pressure, compressor outlet pressure
  MBA10FP901
  Median of measurements in the compressor outlet.

- Calculated temperature, turbine stator ring
  MBA10FT900
  Average of measurements in the turbine stator flanges connecting stator ring 1 and 2.

- Calculated temperature, compressor outlet
  MBA10FT901
  If one thermocouple differs more than set value from the median of MBA10CT030, MBA10CT031 and MBA10CT032 or the thermocouple failure it is set to 0° C.

- Calculated temperature, turbine stator ring
  MBA10FT905
  Average of measurements in the turbine stator flanges connecting stator ring 2 and 3.

- Calculated temperature, turbine exhaust
  MBA10FT910
  Average of measurements in the turbine exhaust.

- Calculated temperature, turbine exhaust
  MBA10FT911
  Maximum to average deviation of measurements in the turbine exhaust.

- Calculated temperature, turbine exhaust
  MBA10FT912
  Minimum to average deviation of measurements in the turbine exhaust.

  Rev C, Start
- Calculated temperature, compressor inlet
  MBA10FT915
  Average of measurements in the compressor inlet.
  Rev C, Stop

This document is issued in Pulse.

We reserve all rights in this document and in the information contained therein. Reproduction, use or disclosure to third parties without express authority is strictly forbidden.
© Siemens Industrial Turbomachinery AB

Test instrumentation

- Connection for test instrumentation, compressor outlet.
  MBA10CU301
  The connection is used for performance measurement or trouble-shooting.
- Connection for test instrumentation, compressor outlet.
  MBA10CU302
  The connection is used for performance measurement or trouble-shooting.
- Connection for test instrumentation, compressor outlet.
  MBA10CU303
  The connection is used for performance measurement or trouble-shooting.
- Connection for test instrumentation, compressor outlet.
  MBA10CU304
  The connection is used for performance measurement or trouble-shooting.
- Connection for test instrumentation, turbine outlet diffuser.
  MBA10CU701
  The connection is used for performance measurement or trouble-shooting.
- Connection for test instrumentation, turbine outlet diffuser.
  MBA10CU702
  The connection is used for performance measurement or trouble-shooting.
- Connection for test instrumentation, turbine outlet diffuser.
  MBA10CU703
  The connection is used for performance measurement or trouble-shooting.
- Connection for test instrumentation, turbine outlet diffuser.
  MBA10CU704
  The connection is used for performance measurement or trouble-shooting.
- Connection for test instrumentation, turbine outlet diffuser.
  MBA10CU705
  The connection is used for performance measurement or trouble-shooting.
- Connection for test instrumentation, turbine outlet diffuser.
  MBA10CU706
  The connection is used for performance measurement or trouble-shooting.
- Connection for test instrumentation, turbine outlet diffuser.
  MBA10CU707
  The connection is used for performance measurement or trouble-shooting.
- Connection for test instrumentation, turbine outlet diffuser.
  MBA10CU708
  The connection is used for performance measurement or trouble-shooting.

This document is issued in Pulse.

We reserve all rights in this document and in the information contained therein. Reproduction, use or disclosure to third parties without express authority is strictly forbidden.
© Siemens Industrial Turbomachinery AB

FUNCTION

Start up

The start up procedure is described below:

- Start of ventilation and lubrication oil system.
- Start of start motor to purge speed 1500 rpm.
- Wait for purge time to expire (time dependant on stack/boiler volume
- At ignition, gas is fed to burner #26 where the spark plug ignites the gas. When the ignition flame is indicating, fuel is fed to the all the burners for main ignition.
- When main ignition is indicating, acceleration to idle speed, 6600 rpm, is started. Both the start motor and the fuel firing is contributing to the acceleration. At 5600 rpm the start motor is switched off. During run-up the bleed valves will close.
- At idle speed the unit is synchronized.
- The start up is finalised when the generator is synchronised and minimum continuous load is obtained.

Continuous operation

Above 50% load, the extraction air from compressor stage 3 is no longer sub atmospheric, and the valves are therefore open. The gas turbine speed is constant independent of load and within the permitted ambient conditions there is no flat rated output. The position of the compressor inlet guide vane (IGV) at full load is dependent on ambient conditions, nominal open below +30° C and continuously closed above.
The load is varied by controlling the compressor IGV, firing temperature and turbine exit temperature. The first step in load decrease is to close the compressor IGV, maintaining the firing temperature until maximal permitted turbine exit temperature is reached. At ambient above +30° C this situation occurs at full load. The next step is to continue closing the IGV until it is fully closed, maintaining the turbine exit temperature by decreasing the firing temperature. The third and final step is to further decrease the firing temperature keeping the IGV fully closed. Load increase is performed in the same way but in opposite order.

The gas turbine speed and load is operated from the automatic control by means of the amount of fuel entering the combustion chamber and the guide vane control. The control input is among other the power demand and ambient air conditions.

Turbine stop

When shutting down the combustor, the gas turbine speed slowly decreases until reaching the set barring speed of the electric starting motor (600 rpm). Barring is then continued for 18 hours, so the gas turbine is cooled down. After this, the starting motor is stopped and the turbine is brought to standstill.

Barring

Barring at 600 rpm will occur after a turbine trip or turbine stop. Barring must be done otherwise the rotor and stator will have different temperature gradients. This can cause the rotor to get stuck. Barring will continue for 18 h at 600 rpm, but the gas turbine can be restarted any time during the barring.

If the barring at 600 rpm is not started due to a failure and the rpm decreases to below 50 rpm within 10 minutes the gas turbine has to cool down for 40h before restarting. This is known as barring block/starting block.

Stand still

The turbine should be handled acc. to packing/stand still instructions. See document 1CS26792 (GTI doc. W980026E) –GT Storage and preservation

DISTURBANCES

Gas turbine trip

A gas turbine trip interrupts the fuel flow to the gas turbine. The gas turbine speed decreases until the rpm is less than 700, after that the gas turbine can be restarted. If not a restart is performed the gas turbine will start barring at 600 rpm. The gas turbine can be restarted any time during the barring.

Generator breaker trip

A generator breaker trip opens the generator breaker, the turbine continues in operation at idle speed and no load.

Loss of power supply

Loss of AC supply to the unit trips the gas turbine. As the power supply to the lube oil system is continuous in case of an AC supply failure, this event does not affect the safe supply of bearing oil. The electrical starting system is fed directly from the grid and is only affected if the grid voltage is lost.

System faults

If there are any damages on combustor, turbine, compressor or bearings, the system may not be started or has to be shut down.
Also the start up procedure may be interrupted if a combustion chamber fault occurs.
If the bleed valves has been locked in closed- or open position the start up is interrupted.
The faults which are supervised by alarms and shutdown procedures are listed in the alarm and trip list.

Other faults

The gas turbine is dependent of its auxiliary systems for proper function. These are the ignition fuel, the main fuel, the pilot fuel, the lube oil, the starting system, the cooling/sealing air and the instrument air. Faults in any of these systems may restrict or interrupt continued start up or operation.

This document is issued in Pulse.

We reserve all rights in this document and in the information contained therein. Reproduction, use or disclosure to third Parties without express authority is strictly forbidden. © Siemens Industrial Turbomachinery AB

A 087 0474-B 00-05 MS Word 97

TECHNICAL SPECIFICATION

Design criteria and standards

- Direction of shaft rotation — Clockwise looking contra flow

Dimensioning data

- Pressure ratio — 19,6:1 at ISO-conditions
- Nominal speed — 6 600 rpm
- Rated flow — 134 kg/s

Installation

The gas turbine is mounted on a single foundation frame next to the auxiliary systems in which the lube oil tank is integrated. The front face of the gas turbine, opposite to the auxiliary systems has been design especially for easy access during inspection.
As the different sections of the gas turbine is built up as removable modules, this also permits easy access and fast simple maintenance.

Component data

Rotor weight (incl. blades)	7860 kg
Engine weight	28375 kg

This document is issued in Pulse.

We reserve all rights in this document and in the information contained therein. Reproduction, use or disclosure to third Parties without express authority is strictly forbidden. © Siemens Industrial Turbomachinery AB

A 087 0474-B 00-05 MS Word 97

This document is issued in Pulse.

We reserve all rights in this document and in the information contained therein. Reproduction, use or disclosure to third Parties without express authority is strictly forbidden. © Siemens Industrial Turbomachinery AB

Index of components

MBA10AE005
IGV 12
MBA10AV005
Ignition system 12
MBA10CG005
Axial displacement 12
MBA10CG010
Axial displacement 12
MBA10CG015
Key phasor 12
MBA10CG025
Axial displacement 12
MBA10CG030
IGV position 12
MBA10CP005
Diff. Pressure compressor inlet 12
MBA10CP010
Pressure compressor inlet 12
MBA10CP015
Pressure compressor discharge 13
MBA10CP016
Pressure compressor discharge 13
MBA10CP017
Pressure compressor discharge 13
MBA10CP030
Pressure combustor chamber 13
MBA10CP035
Pressure disc 1 13
MBA10CP040
Diff. Pressure turbine exhaust 13
MBA10CP041
Diff. Pressure turbine exhaust 13
MBA10CP042
Diff Pressure turbine exhaust 13
MBA10CP045
Pressure turbine exhaust 13
MBA10CP050
Surge protection 13
MBA10CP055
Surge protection 13
MBA10CP060
Surge protection 14
MBA10CP065
Diff. press air intake 14
MBA10CP070
Diff. press air intake 14
MBA10CP075
Diff. press air intake 14
MBA10CP085
Pulsation combustor chamber 14
MBA10CP090
Pulsation combustor chamber 14
MBA10CP095
Pulsation combustor chamber 14
MBA10CQ005
Flame detector 14
MBA10CQ010
Flame detector 14
MBA10CS005
Rotor speed 14
MBA10CS010
Rotor speed 14
MBA10CS015
Rotor speed 14
MBA10CS020
Rotor speed 15
MBA10CS030
Rotor speed 15
MBA10CT005
Temp. bearing 1 radial 15
MBA10CT010
Temp. bearing 1 radial 15
MBA10CT015
Temp. bearing 1 thrust 15
MBA10CT020
Temp. bearing 1 thrust 15
MBA10CT025
Temp. compressor inlet 15
MBA10CT026
Temp. compressor inlet 15
MBA10CT027
Temp. compressor inlet 15
MBA10CT030
Temp. compressor outlet 16
MBA10CT031
Temp. compressor outlet 16
MBA10CT032
Temp. compressor outlet 16
MBA10CT035
Temp. stator ring 1-2 16
MBA10CT040
Temp. stator ring 1-2 16
MBA10CT045
Temp. stator ring 1-2 16
MBA10CT050
Temp. stator ring 2-3 16
MBA10CT055
Temp. stator ring 2-3 16
MBA10CT060
Temp. stator ring 2-3 16
MBA10CT065
Temp. turbine casing 16
MBA10CT070
Temp. vane seal stage 2 17

This document is issued in Pulse.

We reserve all rights in this document and in the information contained therein. Reproduction, use or disclosure to third Parties without express authority is strictly forbidden. © Siemens Industrial Turbomachinery AB

MBA10CT080
Temp. vane seal stage 2 17
MBA10CT090
Temp. bearing 2 17
MBA10CT095
Temp. bearing 2 17
MBA10CT100
Temp. turbine exhaust 17
MBA10CT105
Temp. turbine exhaust 17
MBA10CT110
Temp. turbine exhaust 17
MBA10CT115
Temp. turbine exhaust 17
MBA10CT120
Temp. turbine exhaust 17
MBA10CT125
Temp. turbine exhaust 18
MBA10CT130
Temp. turbine exhaust 18
MBA10CT135
Temp. turbine exhaust 18
MBA10CT140
Temp. turbine exhaust 18
MBA10CT145
Temp. turbine exhaust 18
MBA10CT150
Temp. turbine exhaust 18
MBA10CT155
Temp. turbine exhaust 18
MBA10CT160
Temp. turbine exhaust 18
MBA10CT165
Temp. turbine exhaust 19
MBA10CT170
Temp. turbine exhaust 19
MBA10CT175
Temp. turbine exhaust 19
MBA10CT900
Temp. average stator ring 1-2 20
MBA10FT905
Temp. average stator ring 2-3 20
MBA10FT910
Temp. average turbine exhaust 20
MBA10FT911
Max to average turbine exhaust temp 20
MBA10FT912
Min to average turbine exhaust temp 20
MBA10CY005
Vibration bearing 1 19
MBA10CY010
Vibration bearing 2 19
MBA10CY015
Vibration bearing 2 19
MBA10CY020
Vibration bearing 2 19
MBA10CY025
Vibration bearing 1 19
MBA10CY030
Vibration bearing 1 19
MBA10FF900
Inlet mass flow 19
MBA10FP901
Pressure compressor outlet 19
MBA10FT901
Temp. compressor outlet 20
MBA10FT915
Temp. compressor inlet 20

ภาคผนวก ข-8

เอกสารแสดงการใช้ก๊าซธรรมชาติเป็นเชื้อเพลิง

Gas Turbine Data - SGT-800 Enhanced

General Identification

Type	Industrial
Model	SGT-800
Applications	Simple cycle, Power Generation Cogeneration cycle Combined cycle
Number of shafts	1

Gas Turbine

Drive shaft position	Cold end
Type of compressor	Axial flow
Number of compressor stages	15 stages total (3 stages with variable guide vanes)
Number of compr. extractions	5 (3rd, 5th, 8th, 10th and 15th stage)
Pressure ratio	21.9:1 (at ISO and N.G. fuel)
Nominal output (net)	52,8 MWe (at ISO and N.G. fuel)
Nominal heat rate (net)	9287 kJ/kWh (at ISO and N.G. fuel)
Nominal efficiency (net)	38,8 %
Nominal exhaust flow	138 kg/s (at ISO and N.G. fuel)
Nominal exhaust temperature	550 °C (at ISO and N.G. fuel)
Type of turbine	Axial flow
Number of turbine stages	3 (Stage 1: Film cooled; Stage 2: Convection cooled; Stage 3: Non-cooled)
Turbine inlet temperature	1237,6 °C (average thermodyn. mixed gas temp.)
Rotor weight (including blading)	7200 kg
Rotor construction	Electron beam welded compressor, bolted turbine discs

We reserve all rights in this document and in the information contained therein. Reproduction, use or disclosure to third parties without express authority is strictly forbidden.
© Siemens Industrial Turbomachinery AB

Nominal rotor speed	6600 rpm [after gear (4-pole) = 1500 rpm]
Thrust bearing type	Tilting pad (forced lubrication)
Journal bearing type	Tilting pad (forced lubrication)
Nominal thrust load	200000 N
Type of combustor	Single, annular combustion chamber Low emission variant, dry
Number of burners	30
Burners type	Single fuel or dual fuel

We reserve all rights in this document and in the information contained therein. Reproduction, use or disclosure to third parties without express authority is strictly forbidden.
© Siemens Industrial Turbomachinery AB

ภาคผนวก ข-9

เอกสารรับรองบุคลากรด้านสิ่งแวดล้อม

ที่ อก ๐๓๑๓/ ๕๙๕๕

กรมโรงงานอุตสาหกรรม
ถนนพระรามที่ ๖ แขวงทุ่งพญาไท
เขตราชเทวี กรุงเทพฯ ๑๐๔๐๐

๒๐ มีนาคม ๒๕๖๖

เรื่อง หนังสือรับแจ้งการมีบุคลากรด้านสิ่งแวดล้อมประจำโรงงาน

เรียน ผู้รับใบอนุญาตประกอบกิจการโรงงาน บริษัท กัลฟ์ บีแอล จำกัด

อ้างถึง คำขอเลขที่ ๐๓๒๗ ลงรับวันที่ ๑๐ มีนาคม ๒๕๖๖

ตามคำขอที่อ้างถึง ท่านแจ้งการเปลี่ยนแปลงบุคลากรด้านสิ่งแวดล้อมประจำโรงงาน ของ บริษัท กัลฟ์ บีแอล จำกัด ทะเบียนผู้ประกอบอุตสาหกรรมเลขที่ ๗๒๑๒๐๒๐๐๒๒๕๕๘๘ (น.๘๘(๒)-๒/๒๕๕๘-ญบว.) ประกอบกิจการผลิตกระแสไฟฟ้าโดยใช้ก๊าซธรรมชาติและไอน้ำ ผลิตไอน้ำ และผลิตน้ำเย็น ตั้งอยู่ ณ เลขที่ ๗๗๗ หมู่ที่ ๑ ตำบลบ้านเลน อำเภอบางปะอิน จังหวัดพระนครศรีอยุธยา โทรศัพท์ ๐ ๓๕๓๕ ๕๓๘๐-๓

กรมโรงงานอุตสาหกรรมพิจารณาแล้ว รับแจ้งการเปลี่ยนแปลงบุคลากรด้านสิ่งแวดล้อมประจำโรงงาน และให้ท่านยื่นคำขอแจ้งการมีบุคลากรด้านสิ่งแวดล้อมประจำโรงงานครั้งต่อไป ภายในวันที่ ๒๖ กรกฎาคม ๒๕๖๗ โดยมีบุคลากรด้านสิ่งแวดล้อมประจำโรงงาน ดังนี้

ผู้จัดการสิ่งแวดล้อม	นายอดิศักดิ์ เชิดชูวงศ์ธนากร

ลำดับ	ผู้ควบคุมระบบบำบัด	เลขทะเบียน	มลพิษน้ำ	มลพิษอากาศ	มลพิษกากอุตสาหกรรม
๑	นายภัทร บุญพิพัฒนาพงศ์	๐๒๐-๖๔-๐๐๓๑๑		✓	

ลำดับ	ผู้ปฏิบัติงานประจำระบบบำบัด	มลพิษน้ำ	มลพิษอากาศ	มลพิษกากอุตสาหกรรม
๑	ว่าที่ ร.ต. ตั้งปณิธาน จันทร์ดวง		✓	
๒	นายสุภาพ เมืองแก้ว		✓	
๓	นายธีรพล มลฑา		✓	
๔	นายชินพัฒน์ อุทยารัตน์		✓	
๕	นายพัทธพล ธัมรุจินันท์		✓	

ลำดับ ๖...

ลำดับ	ผู้ปฏิบัติงานประจำระบบบำบัด	มลพิษน้ำ	มลพิษอากาศ	มลพิษกากอุตสาหกรรม
๖	นายสหชัย บุญชู		✓	
๗	นายเทอดเกียรติ ก้อนทอง		✓	
๘	นายวัชรพงศ์ แก้วหาวงศ์		✓	

หมายเหตุ ๑. การแจ้งการมี/ยกเลิก/เพิ่มเติม/เปลี่ยนแปลง บุคลากรด้านสิ่งแวดล้อมประจำโรงงาน ต้องส่งหนังสือฉบับนี้ด้วย
๒. ยกเลิกหนังสือรับแจ้งการมีบุคลากรด้านสิ่งแวดล้อมประจำโรงงาน ที่ อก ๐๓๑๓/๗๔๐๖ ลงวันที่ ๒ สิงหาคม ๒๕๖๔

จึงเรียนมาเพื่อโปรดทราบ

ขอแสดงความนับถือ

(นายณรงค์ บัวบาน)
ผู้อำนวยการกองส่งเสริมเทคโนโลยีสิ่งแวดล้อมโรงงาน
ปฏิบัติราชการแทนอธิบดีกรมโรงงานอุตสาหกรรม

กองส่งเสริมเทคโนโลยีสิ่งแวดล้อมโรงงาน
กลุ่มกำกับบุคลากรด้านสิ่งแวดล้อมประจำโรงงาน
โทรศัพท์ ๐ ๒๔๓๐ ๖๓๑๕ ต่อ ๒๔๐๕
โทรสาร ๐ ๒๔๓๐ ๖๓๑๕ ต่อ ๒๔๙๙
ไปรษณีย์อิเล็กทรอนิกส์ saraban@diw.mail.go.th

ภาคผนวก ข-10

เอกสารข้อมูลจำเพาะของเครื่องจักรและอุปกรณ์ที่มีเสียงดัง

Noise Emissions Guarantee Test

Gulf MP				TOYO ENGINEERING / PÖYRY			
A	A01	5 July 2018	For approval	HTA	AL	MU	
Gulf	Poyry	Date	Description	Prepared	Checked	Approved	Authorized
Rev. No.							

Copyright © Pöyry Energy Ltd.

REVISION HISTORY

Rev No.		Date	Description
Gulf	Poyry		
A	A01	5 July 2018	For approval

Copyright © Pöyry Energy Ltd.

Content

1 INTRODUCTION 4

2 OBJECTIVE OF THE TEST 4

3 GUARANTEES 4

4 NOISE EMISSION GUARANTEE TEST 6

4.1 Near Field Noise Measurement- Respective Equipments 6
4.2 Near Field Noise Measurement of Safety Valve Silencers, Start up Vent 7
4.3 Far Field Noise Measurement-Site Boundary Noise Measurement 7

5 INSTRUMENTATION 8

ATTACHMENT

1: Sound Level Meter

Copyright © Pöyry Energy Ltd.

1 INTRODUCTION

Per Schedule 4 Plant Tests, Section 5.4.3 of the Construction Contract of Gulf MP 12SPP Cogeneration project, the GBL power plant shall be in compliance with the Performance Guarantees in Part 2 Table 2.3 Noise Emission of Schedule 3.

2 OBJECTIVE OF THE TEST

The objective of the test is to demonstrate that the GBL Project is in compliance with the specified near field and far field noise emissions guarantees.

3 GUARANTEES

When the GBL Power Plant is operating between Off-peak to Peak, the following noise emission limits will not be exceeded

Item	Parameter	Units	Value
1	Near field noise guarantee The surface sound pressure level averaged over the measurement surface at a distance of 1 meter from the respective equipment acoustical enclosure at 1.5 m above ground shall not exceed	dB(A)	85
2	Far field noise guarantee The sound pressure level at Power Plant boundary and 1.5 meters above the ground shall not exceed	dB(A)	70 Leq(24)
3	Near field noise guarantee of safety valve silencers and start up vent valve silencers as well as steam turbine bypass valves The sound pressure level at a distance of 1 meter from the safety valve silencers and start up vent valve silencers as well as steam turbine bypass valves shall not exceed	dB(A)	95

Copyright © Pöyry Energy Ltd.

The noise emission guarantee test will be measured at different plant conditions as described in table below

Test#	Test Load	Duration	Test Items
1	Combustion turbine operating at normal plant operation (Base load and Part load)	Base load: at least Leq 30 sec or longer to establish representative equipment noise emission	Near field noise measurement throughout the Plant at locations normally occupied by personnel and in the vicinity of equipment (see paragraph 4.1). (Operational & BG)
2	Transient plant operation - During any plant start	Start up vent valve measurement, Leq10 sec	Near field noise measurement of safety valve silencers, start up silencers and steam turbine bypass valves (See paragraph 4.2)
	Base load combustion turbine operation with the ST bypassed and with steam let down to process	Steam turbine bypass measurement Leq10 sec	
	Actuate safety valves by operation close to normal operating pressure	Safety valve measurement, Leq 10 sec	
3	Combustion turbine operating at normal plant operation (Base load and Part load)	24 hrs x 5 days	Far field site boundary noise measurement (20 measurements locations agreed upon between contractor and owner) as Leq1 hr, Leq24,L90,Ldn, Lmax (see paragraph 4.3) **Note1** Operational & BG, BG as Leq5 min only

BG = Back ground

Note1:
20 measurement locations will be decided after discussion between Owner and Contractor considering actual site conditions.
Map showing the measurement locations will be provided before noise test once the measurement location are identified.

Copyright © Pöyry Energy Ltd.

4 NOISE EMISSION GUARANTEE TEST

The noise emission guaranty test will be performed according to ISO 3746 procedure and Thai Standard. The following sections described the test procedures to be followed in conducting the noise guarantee test.

4.1 Near Field Noise Measurement- Respective Equipments

Operational Noise .The average A-weight sound pressure level at one (1) meter horizontal distance from major surface of the respective equipment or acoustic enclosure at an elevation of one point five (1.5) meter above ground level (such areas shall normally be accessible/occupied by personnel) will be determined . The near field noise will be measured for the following equipment, which are normally occupied by personnel for plant operation. Detail coordination of measurement locations to be discussed and will be identified on the plant layout.

1.) GTG11 & HRSG 11
2.) GTG12 & HRSG 12
3.) STG
4.) BFW pumps
5.) MCW pumps
6.) ACW pumps
7.) CCW pumps
8.) Condensate pumps
9.) Cooling tower fans
10.) Air compressor package
11.) Fuel Gas compressor package

Field measurements shall not be performed during periods when unusual activities are taking place that may influence the measured noise levels such as aircraft, construction or nearby extraneous noise events. The A -weighted sound pressure level averaged over the measurement surface shall be logarithmically averaged with the following equation:

$$L_{PeqA} = 10 \times \log\left[\frac{1}{N} \times \sum_{i=1}^{N} 10^{0.1 \times L_{Peq}}\right] \text{ dB}$$

Where,

LPeqA = A-weighted sound pressure level averaged over the measurement surface, in decibels, with the source under test operation

Lpeq = A-weighted sound pressure level measured at the *P'* microphone position, in decibels

N = the number of microphone position

Background noise will be obtained at each of measurement position used for operational sound level measurement as described above-but with all of the equipment within Contractor's scope of supply not operating.

Copyright © Pöyry Energy Ltd.

Corrections for the environment, for the equipment exceeding 85 dB(A) after correction of background noise ,the environment correction , building correction of the reflected or absorbed sound shall be applied following Section A3 of ISO 3746. Then the corrected A-weighted sound pressure level will be determined by correcting the A-weighted sound pressure level averaged over the measurement surface for background noise and for reflected sound /environment. The results shall not exceed 85 dB(A).

4.2 Near Field Noise Measurement of Safety Valve Silencers, Start up Vent Silencers and Steam Turbine Bypass Valves

Noise measurement , as Leq 10 sec in dB(A) shall be made at the Safety Valve Silencers, Start up Vent Silencers and Steam Turbine Bypass Valves using sound level meter that meet the requirements of IEC 651 Type 2. The measurement positions will be within one (1) meter from the surface of any individual equipment and 1.5 m above ground. Such test require transient plant operation that is

- Start up vent measurement shall be collected during any plant start
- ST bypass valve measurement shall be collected during base load combustion turbine operation with the ST bypassed and with steam letdown to process
- Safety valve will be actuated by operation close to normal operating pressure.

.

The transient plant operation of which the above noise occurs will be informed in advance.

4.3 Far Field Noise Measurement-Site Boundary Noise Measurement

Far field noise measurements Site boundary noise measurements shall be determined as equivalent continuous sound pressure level at outdoor locations agreed between the Owner – Contractor as appropriate for the Site and surrounding environment. Approximately twenty (20) measurement locations along the site boundary such as fence area of the GBL power plant shall be selected for the measurements. Each location should be measured at an elevation of 1.5 meters above the ground and at a minimum distance of 3.5 meter form any sound reflecting surface. The measurement locations should include locations nearest any noise generating equipment, positions anticipated to produce the highest plant noise and locations towards the closest neighbours (community).

Far field noise along the site boundary will be measured at 1 hr interval over twenty-four (24) consecutive hours to establish the 24 hr-weighted equivalent sound pressure level (Leq24) and 90 percentile sound pressure level (L90). Measurement shall be made during 5 days periods of normal Power Plant operations- Peak and Off- peak (Peak may not equal to base load depending on IU demand).

Background for far field noise measurement. Background noise will be measured at 5 minute/locations (Leq5) on the date without power plant operation. The equivalent

Copyright © Pöyry Energy Ltd.

sound pressure level, Leq24 after applying correction for background noise level will then be compared with the standard of 70 dB(A) as specified in the Notification of National Environment Board No.15 (BE 2540)

5 INSTRUMENTATION

All noise measurements will be conducted using a sound level meters. The instrument was designed in accordance with IEC 651 Type 2 requirements. The instrument will be calibrated using a sound level calibrator of known sound pressure level (94 dB(A) , frequency of 1000 Hz and accuracy of + 0.5 dB). Calibration will be performed before and after each measurement series and upon any significant change in recording conditions, such as a battery change operation. The calibration level will be constant within 0.1 dB. Calibration sheet of the device will be handed over to owner for review before the start of the test.

Details of the sound level meters and its calibrator are shown in Appendix 1.

Copyright © Pöyry Energy Ltd.

Attachment 1

(To be advised)

Copyright © Pöyry Energy Ltd.

ภาคผนวก ข-11

เอกสารการออกแบบใบพัดของหน่วยหล่อเย็น

ICS COOLING TOWER

OPERATIONS & MAINTENANCE MANUAL

Project Name:	**Ban Lane Power Plant**
Owner Name:	**Gulf**
Project Number:	**12915 (GBL)**
ICS Model:	**3CFC-363632-22**
Type:	**Counter Flow Concrete**

Gulf MP Company Limited

12SPP Project

Applicable Projects: GBL

Requisition No: GXEF001
Document No: ICS-GBL-002-M-090-238
Operations and Maintenance Manual

FOR CONSTRUCTION

POYRY ENERGY LTD. Document Submission Approval	
APPROVED Approved without exception	**AP**
APPROVED WITH COMMENTS Approved subject to Incorporation of comments	**AWC**
NOT APPROVED Insufficient information/detail Resubmit for Approval	**NAP**
REJECTED Complete redesign required	**REJ**
Note. Approval or does not relieve Vendor/Sub-Contractor of any obligations covered under contract	
Engineer: Laron H.	
Discipline: Mech. **Date:** 22 Nov 2017	

System No.	Equipment No.
TBA	10PAD91AN001, 10PAD92AN001 and 10PAD93AN001

REV	DATE ISSUED	ISSUE PURPOSE	PREPARE	CHECKED	APPROVED	AUTHORIZED
1	30-Oct-17	Final	TJD	TJD	TJD	IF
0	18-Sep-17	Final	TJD	TJD	TJD	IF
A	13-Apr-17	For Approval	TJD	TJD	TJD	IF

Industrial Cooling Solutions

ICS OPERATIONS AND MAINTENANCE MANUAL

PROJECT NAME	Ban Lane Power Plant
OWNER	Gulf MP
CONTRACTOR NAME	Toyo Engineering Company
P/O NUMBER	GXEF001
ICS JOB NUMBER	12915
ICS DOCUMENT NUMBER	12915-DOC024
LOCATION	Rayong,Thailand
O&M ISSUED ON	19-Sep-17
MODEL NUMBER	3CFC-363632-22

This Industrial Cooling Solutions, Inc. (ICS) Operations and Maintenance Manual will provide you with valuable information about your ICS cooling tower.

Included in this manual are:

- Operating Procedures
- Maintenance Instructions
- Troubleshooting
- Data Sheets
- Spare Parts List (for 2-years operation)
- Cooling Tower Equipment Specifications
- General Arrangement and Installation Drawings
- Lubrication List

ICS provides our clients with full-service cooling tower services. We hope you will see the pride we put into our towers and look to us for all of your future cooling tower needs. We specialize in new and rebuilt cooling tower engineering and construction along with repair and comprehensive maintenance of existing cooling towers. We are a preferred distributor for top name-brand cooling tower components and receive discounted OEM pricing with most vendors.

Whatever your cooling tower need, ICS is your committed partner in cooling.

Sincerely,

Timothy Bozic
President
Industrial Cooling Solutions, Inc. (ICS)

ICS USA Office
1457 Ammons Street, Suite 206, Lakewood, CO 80214
Tel. +1 (303) 462-2000, Fax. +1 (303) 984-2699
www.h2ocooling.com

ICS Thailand Office
9th Floor Serm-Mit Tower, 159 Sukhumvit 21, Asoke Road
North Klongtoey, Wattana, Bangkok, 10110
Tel. +66 (0) 2260-6598, Fax. +66 (0) 2260-6599

INDUSTRIAL COOLING SOLUTIONS

NOTICE TO USER

READ THIS ENTIRE MANUAL BEFORE OPERATING THE TOWER.

Every effort has been made to ensure that the information in this manual is complete, accurate, and up to date. Industrial Cooling Solutions (ICS) assumes no responsibility for the result of errors beyond its control.

Adequate knowledge of the operation and maintenance of the cooling tower and its components will ensure efficient and safe operation. Users should familiarize themselves with the construction, operation, and maintenance of the cooling tower and its components. **Failure to do so may cause poor performance, unnecessary equipment failure, and downtime.**

ICS USA Office
1457 Ammons Street, Suite 206, Lakewood, CO 80214
Tel. +1 (303) 462-2000, Fax. +1 (303) 984-2699
www.h2ocooling.com

ICS Thailand Office
9th Floor Serm-Mit Tower, 159 Sukhumvit 21, Asoke Road
North Klongtoey, Wattana, Bangkok, 10110
Tel. +66 (0) 2260-6598, Fax. +66 (0) 2260-6599

INTRODUCTION

A SHORT DESCRIPTION OF A CONCRETE COUNTERFLOW COOLING TOWER

An ICS field-erected concrete evaporative cooling tower consists of:

- A concrete superstructure.
- A water distribution system consisting of a header to each cell with lateral piping and nozzles above the fill sections.
- A heat exchange medium (the fill) made up of a matrix of PVC material.
- A basin to collect the cooled water and direct it back to the circulating pumps.
- Fans to move the air necessary for proper heat exchange.
- Drift eliminator medium to prevent water droplets from escaping from the tower in the air flow.

Operation of the tower centers on exposing warm water to moving air, to affect an evaporative, or latent, heat transfer. This heat is dissipated into the atmosphere. Keep the tower clean and the water distribution uniform to obtain continued maximum cooling capacity. Do not allow excessive deposits of scale or algae to build up on the fill media or the drift eliminators. Keep all nozzle orifices free of debris to assure correct distribution and cooling of water.

The water to be cooled is transported to the distribution system by riser pipes external to the tower. Water flows from the risers into a horizontal distribution piping system. From there it flows into the lateral pipes and exits through nozzles. These nozzles distribute the water over the fill medium.

Before the air flow is permitted to exit through the top of the tower, it must pass through the Drift Eliminators. These are simply a block of material shaped to cause the air to change directions and thus

TABLE OF CONTENTS

INTRODUCTION **PAGE**
A Short Description of a Concrete Counterflow Cooling Tower 1

STANDARD OPERATING PROCEDURE
Warning! 3
Pre-Starting Procedure 4
Starting Procedure 6
Normal Operating Procedure 8
Winter Operating Procedure 9
Severe Weather Preparation 11
Shutdown Procedure 12
Water Treatment 14

MAINTENANCE INSTRUCTIONS
Pre-Operation Maintenance Instructions 18
Periodic Maintenance Instructions 19
Cooling Tower Troubleshooting 20
Equipment Storage 24
Fill and Drift Eliminator Inspection 25

APPENDICES
APPENDIX A – Cooling Tower Equipment Summary
APPENDIX B – Recommended 2-Year Operational Spare Parts
APPENDIX C – Lubrication List
APPENDIX D – Selected Arrangement Drawings
APPENDIX E – Mechanical Equipment
- E.1 - Fan
- E.2 - Motor
- E.3 - Vibration Switch
- E.4 – Reduction Gear Drive
- E.5 - Drive Shaft

APPENDIX F – Cooling Tower Components
- F.1 - Fill & Drift Eliminator
- F.2 - Nozzle

INTRODUCTION

provide impact surfaces which prevent water droplets from being carried out of the tower with the air flow.

The falling water is caught by the cold water basin, which then directs the flow back through pump screens to the circulation pumps. The normal water level in the tower basin is about 12" (305 mm) below top of curb. Adjust make-up water supply to maintain this water level.

The capacity of a tower to cool water to a given cold water temperature varies with the wet-bulb temperature and the heat load on the tower. As the wet-bulb temperature drops, the cold water temperature also drops. However, the cold water temperature does not drop as much as the wet-bulb temperature. A tower does not control heat load. The quantity of water circulated determines the cooling range for a given heat load. The hot and cold water temperature increases with higher heat loads.

Wet-bulb temperature: The temperature indicated by the wet-bulb thermometer of a sling or mechanically aspirated psychrometer. Also, an indicator of the capacity of the ambient air to receive an amount of water vapor and heat.

Cooling range: The temperature difference between the hot water coming into the cooling tower and the cold water leaving the tower.

STANDARD OPERATING PROCEDURE

WARNING!

All electrical, mechanical, and rotating machinery present a potential hazard, especially for those not familiar with their design, construction, and operation. Adequate measures should be taken with this equipment to both safeguard the public from injury and to prevent damage to the equipment and its associated systems.

The operation, maintenance, and repair of this equipment should only be performed by qualified personnel. All such personnel should be thoroughly familiar with the equipment, the associated systems, and controls, and all procedures dealing with the installation, operation, maintenance, and repair of this equipment to prevent personal injury and/or property damage.

Lock out and disconnect all electrical power before attempting to service the cooling tower.

STANDARD OPERATING PROCEDURE

PRE-STARTING PROCEDURE

Follow all operating procedures to ensure extended life of your ICS cooling tower. For any situations not covered in the manual, call Industrial Cooling Solutions Inc. (ICS) direct in Lakewood, Colorado, USA at +1 303-462-2000 or visit www.h2ocooling.com. Please reference the ICS tower model number and order number listed in the introduction letter regarding questions concerning this tower or upon ordering of spare parts.

FIRST TIME WATER IS TURNED ON (FANS ARE NOT OPERATING)

Fill the cold water basin and circulating water system slightly above the operating water level to allow for drawdown. When filling the water system, make sure to close all riser valves to prevent over-pressurizing on the hot water distribution system and open bypass line valve.

1. Start-up the circulating water pumps. Under no circumstances should water from the first start-up be fed to the cells since this water is dirty, may contain debris, and is likely to block the nozzles. The water must bypass the tower and must be pumped through the circuit for a minimum of one full cycle through the circulating water system in order to clean the circuit.
2. Maintain observation on the water level in the basin to prevent overfilling if the sump screens were to clog with debris.
3. After the initial flush, the pumps are to be stopped, and the basin emptied and cleaned out.
4. Repeat this process until all significant debris has been removed.
5. Once the basin has been refilled, the tower is ready to go into operation.
6. Refer to Starting Procedure to start the cooling tower.

SAFETY

While any portion of the tower is shut down, barricade any access openings or fan stack openings during the shutdown period. While inspecting or maintaining any section of mechanical equipment, lockout motors at fan disconnect box with proper procedures guaranteed to prevent accidental unlocking. Follow all OSHA, and/or other governing regulations and standards including use of safety harnesses where appropriate.

CLEANING

Remove any debris or trash from the distribution system and fill. After circulating water is flowing, visually inspect the system for any clogged nozzles. Remove any sediment from the cold water basin, sump and pump screens.

STANDARD OPERATING PROCEDURE

INSPECTION

All operating components must be inspected before they are placed in operation. Specifically check all of the following:

1. Inspect all safety devices and interlocks to insure they are wired and functioning correctly. Safety devices such as the reduction gear oil level or flow switch (if supplied) or the vibration switch/monitoring system must never be bypassed to expedite a start-up.
2. Check drive shaft alignment. Re-align, if necessary.
3. Check tightness of bolts that attach support frame of reduction gear (fan drive) to the tower structure.
4. Check tightness of bolts at fan cylinder joints and anchorage.
5. Check tightness of the following bolted joints in the fan and drive assemblies:
   a. Fan hub clamp bolts.
   b. Fan hub cover bolts.
   c. Reduction gear and motor mounting and alignment bolts.
   d. Drive shaft coupling and guard bolts.
6. Check reduction gear oil for sludge or water by draining off and testing a sample. Check reduction gear oil level at the filling sight glass of level gauge outside of fan stack. Add oil as required.
7. Rotate fan by hand to be sure of free clockwise rotation and a tip clearance of ¾"-1 ½" (19mm-38mm) when viewed from above.
8. Lubricate the motor according to motor manufacturer's instructions.
9. Check the fan pitch, per manufacturer's manual. Then test run each fan separately for a short time (less than five (5) seconds). Check for excessive vibration or unusual noise. If either is present, see Cooling Tower Troubleshooting on the following pages of this manual.

   Depending on the power demand and the ambient temperature, it may be necessary to adjust the fan pitch. Please note that more power is required to drive the fan without water flow turned on the tower than water flow with normal heat load.
10. Check functioning of make-up water supply, blow-down, drain and outlet valves.

NOTE: *It is recommended that all readings be noted in a logbook. Items #1, #5 and #6 are to be made before each start-up.*

If starting in cold weather, follow procedure outlined in Cold Weather Startup.

STANDARD OPERATING PROCEDURE

STARTING PROCEDURE

FIRST TIME WATER IS TURNED ON (AFTER THE TOWER HAS BEEN DOWN)

If the cooling tower basin has not been drained, cleaned or work performed on the cooling system, use Standard Startup Procedure. Otherwise, follow the procedure for first time filling of the basin in the First Time Water is Turned On section.

STARTING

When starting the flow of water be sure to slowly open the valves ("throttle" the valves). This will ensure that the flow of water starts evenly and does not over-pressurize the system. Starting the system in Full or 100% on position of the control valves may result in damage to the tower components.

Check the equilibrium of water distribution between the cells. By nature this system is self balancing and so all cells should receive approximately the same amount of water.

Verify that the design flow is not exceeded. This can be accomplished by monitoring of the circulating water pump KW versus the pump curve. Contact Industrial Cooling Solutions Inc. Engineering Department if greater than design water flow is necessary.

Check all mechanical equipment to insure no foreign material is obstructing movement of the fans. Start each fan separately, monitoring any excessive vibration. Excessive vibration will trip the vibration switch/monitoring system and shut down fan motors. To check operation of vibration switch, follow the instructions provided by the vibration switch/monitoring manufacturer.

- Should the vibration detecting system be inoperative, contact ICS.
- Should there be excessive vibration, the cell number should be noted and ICS service department notified.
- After five minutes of operation, recheck the reduction gear oil levels.

The fan pitch should be set to approximate design brake horsepower at full heat load and design conditions. If all operating criteria including wet bulb and heat load are near design, the fan brake horsepower can be checked. After 30 minutes of operation, the gear oil will be at proper temperature to allow checking of motor wattage, or voltage and amperage; this will allow for calculation of brake horsepower.

STANDARD OPERATING PROCEDURE

RE-STARTING AFTER A STOPPAGE UNDER NORMAL CONDITIONS

1. Preliminary checks
   a. Check gearbox oil level.
   b. Check for freedom of rotation.
   c. Check water level in basin.
   d. Check that no extraneous material is present in the cells.
   e. Check that the vibration switch/monitoring system, oil level/flow switch is energized.
2. Operation: To run the tower, proceed in the following manner:
   a. Turn water on to cells (1) (2).
   b. Turn fan motors on.

***NOTE**: (1) Water flow without fan operation may result in splash-out from basin.*
(2) Regulate water flow at riser valves as necessary to prevent water hammer and over pressurization of the hot water distribution system.

STANDARD OPERATING PROCEDURE

WINTER OPERATING PROCEDURE

GENERAL

The ICS counterflow cooling tower is specifically designed to reduce icing problems during cold weather operation. The only area in direct contact with entering air is the air inlet opening. All other components are within the tower and protected as long as the tower is supplied with substantial operating heat load. If no heat load is available, the circulating water should be bypassed directly to the cold water basin or if not equipped with bypass capability, shut down totally.

Water flow rates to the tower must be maintained at the highest normal operating level. This is to ensure full warm water wash of the internal components.

Any formation of substantial size icicles hanging from the bottom of the fill can result in damage to the fill material and potentially structural components in the air inlet.

COLD WEATHER STARTUP (TEMPERATURES BELOW 40°F (4°C))

With initial startup of the entire tower or individual cells, general procedures as outlined earlier should be followed. In addition, the procedure should include:

- Check the hot water distribution piping system for all nozzles at full flow (see Cooling Tower Troubleshooting section if any nozzles are clogged).
- Visually inspect the fan and drive shaft for any ice buildup. Startup with ice on the fan blades or drive shaft can cause an imbalance and lead to damage.

Start water flow prior to any other startup. Should there be any ice buildup on the mechanical equipment; the warm air vapor must be allowed to completely melt the ice prior to any other equipment startup.

COLD WEATHER STARTUP PROCEDURE

The cold water temperature should be maintained at 55°F (12.8°F) or greater. The temperature should be monitored every four to six hours during critical dry bulb periods.

When the water temperature fall below 55°F (12.8°F), the following steps should be taken:

1. Fans should be shut down, one at a time one at a time as needed to maintain cold water temperatures above 55°F with one fan unit off; shut off both fans.

   ***NOTE**: With fans off, splash-out may occur from the air inlets.*

STANDARD OPERATING PROCEDURE

NORMAL OPERATING PROCEDURE

After the tower has been placed in full operation, all systems must be monitored on a regular basis.

Log sheets should be maintained regarding inspection of the cooling tower systems. Items to be included on the log sheets are as follows:

- Each cell should be given a specific number and I.D.
- Gears, motors and drive shafts should have an individual I.D.
- Date and time of inspection.
- Normal basin water level.

All cooling tower systems are to be checked daily. Items that must be checked include:

- Reduction gear oil level for each cell.
- Fan motor operation, i.e. if the fan is at half speed, full speed or off for each cell. If the fan motor is off, plant operation should be checked for any reasons as to why. If the motor should be on or at half speed, further investigation must be made.
- Observe drive shafts for radial imbalance, unusual movement or any excessive vibration.
- Electrical conduit on top of the tower should be visually checked for any excessive corrosion or breaks.
- Access hatches on fan deck should be closed.
- Any excessive noise in either motors or fans should be noted and reported.
- Water flow observed in the air inlet area should be noted as either normal or abnormal. Areas with excessive flow or with very little flow should be noted and reported.

The tower can be operated under normal conditions with the Cold Water Temperature being above 55°F (12.8 °C) consistently throughout a 24-hour day.

***NOTE**: The cooling tower will not control heat load. The flow rate of water circulated through the tower will determine the temperature range of cooling in conjunction with a given heat load. Hot and cold water temperatures will increase with higher heat loads.*

The hot water returning to the tower shall not exceed 140°F (60°C) to prevent permanent damage to the PVC cooling tower components.

2. In climates where cold water temperatures fall below 55°F (12.8°F) with all fans off, the tower should be equipped with closure tarpaulins. These are to be installed at the air inlet opening on the windward side of the tower. With the tarpaulins in place, the same reduced speed and shutdown fan procedure above should be followed.
3. The same inspection method should be followed as under pre-starting procedures. In addition, visual inspection of the air inlet area should be made during the coldest hours of the day.
4. Any ice buildup on the perimeter columns or the bottom of the fill should be noted and frequently monitored. If ice buildup becomes excessive, begin shutdown procedure as noted above. Do **not** in any case try to physically remove or strip the fill or adjacent concrete structure of ice. Melting will leave components in good condition. Physical removal of ice will generally cause more damage.
5. Reverse Operation:
    a. If the mechanical assemblies supplied with this tower are **not** capable of reverse operation, see documentation supplied by the motor starter and controls vendor for further information.
    b. If the mechanical assemblies supplied with this tower **are** capable of reverse operation, see documentation supplied by the motor starter and controls vendor for further information. Reversing motor rotating direction will reverse fan direction and push air down through the tower components from the fan stack through the air inlet. This will push warm air to the air inlet opening for melting any ice accumulation.
    c. Reversing procedure (if applicable) should be performed only as a last resort. The reversing mode of operation should be monitored continuously. Reverse operation should be used only on those cells with severe ice buildup and systems capable of reverse operation.
    d. The reverse mode should be activated for a maximum of 20 minutes while monitoring for any ice build-up on fan equipment and excessive power consumption.

    NOTE: *Do not exceed maximum number of starts/hour recommended by motor manufacturer.*
6. Flow water fifteen minutes with the fans shut off to prevent ice buildup in the plenum area.
7. Prior to restarting fans in either normal or reverse directions, fan blades must be visually rechecked to ensure there has been no ice buildup.
    - Please allow at least two minutes between forward and reverse operation. It is acceptable to begin reverse direction when the fan is free-spinning in the forward direction. The nearly zero-speed torque applied to the mechanical equipment is not excessive.

SEVERE WEATHER PREPERATION

This section attempts to give instructions for minimizing cooling tower damage in the event that severe weather may affect the cooling tower. Depending on the severity of the weather and unpredictable outcomes, ICS offers this basic advice to secure a cooling tower. It is always prudent to protect human life above any property.

In the event that severe weather damages the cooling tower, ICS is prepared to assist with any and all cooling tower needs pre or post-storm. We are known first responders that successfully repair any and all makes of cooling towers.

BASIC PRE-STORM PROTOCOL

- Shut off electrical supply to the mechanical equipment and lock out.
- Secure fans by tying one or more blades securely to the cooling tower structure.
- High winds resulting in free-spinning blades can strike the fan-stack resulting in damage.
- Consider fan stack tie down with cables tied to the cooling tower structure.
- Remove or secure loose items on or around cooling tower.

Industrial Cooling Solutions is here for you rain or shine. The ICS Disaster Recovery Team is one of the best in the industry and available 24/7 to help you with all of your cooling tower needs. Contact the cooling tower experts directly in Lakewood, Colorado, USA at **+1 303-462-2000** or visit **www.h2ocooling.com**.

2. If the length of shutdown is over one month and conditions are humid, the oil in the reduction gear should be checked. If excessive water is present in the oil, the oil should be changed to avoid emulsion. Each cell, which is out of operation for periods in excess of one week, should be started and run each week for at least ten minutes to reduce the danger of rust forming on gear elements above the oil level.

   For extended shutdown over one month, Shell VSI or other rust inhibitor should be added to the gear oil. See Appendix C for further information. The reduction gear vent line should be closed with a plug at the end of the vent line outside of the fanstack. This will keep a rust-inhibiting vapor inside the box to prevent rust from forming above the oil line. Ensure space heaters on motors, if supplied, are energized and operating. Refer to mechanical equipment manufacturer's manual for additional instructions.

SHUTDOWN PROCEDURE

FAN MOTORS AND REDUCTION GEARS

Stop all fan motors and energize space heaters, if applicable.

When the tower is shut down, operate each fan at half or full speed for a 20-minute (minimum) period monthly during any extended shutdown.

> **CAUTION**: Always make sure fan is free to rotate. Schedule fan runs in winter only after visual inspection. Manually rotate motor shafts (15 revolutions) monthly if power is temporarily unavailable.

CIRCULATING WATER PUMPS

Stop all pumps or close all valves to the hot water distribution piping system.

In above 2°C (35°F) weather, non-fire retardant portions of the tower can be protected from fire by operation of the wet down system, if your tower has this installed, or by running one circulating water pump during no load periods. If all pumps must be stopped, auxiliary methods of continuous tower "wet down" may be utilized for improved fire protection. Alternate wetting and drying of the tower materials, wood, etc., is somewhat destructive. *Caution*: DO NOT wet down tower or circulate cold water over the tower when outside temperature is below freezing.

MECHANICAL EQUIPMENT

1. Prior to shutdown, all flow control valves should be left open as wide as possible. This will help reduce any excessive vacuum that would result from back siphoning effects. Back siphoning could result from improper sequencing between pump and tower supply valve closing procedures. Normal procedures would be to start closure of cooling tower supply valves first. At approximately 60-90% full closure, the discharge pumps can be shut off. The cycle and sequence depend on valve and pump design and the amount of time required for full valve closure.

   During shutdown periods all external bolts, including stairway, ladder, hand rail bolts, etc., should be checked and tightened if loose. The mechanical system could vibrate if bolts are not tight between motor and gear supports and the tower concrete superstructure.

Care must be taken to avoid chemical attack on the concrete of the basin and cooling tower superstructure as well as to prevent scale build up on the tower components.

The tower materials have been selected in consideration of water analysis included in the specifications. The following commentary about water quality in cooling towers should assist the cooling tower engineer with maintaining the appropriate water quality for the tower.

Precautions must be taken in order to avoid water quality problems affecting the tower performance or operation. Specifically, attention needs to be directed to the following:

- Scale formation and other deposits.
- Formation of algae or excessive microbial activity.
- Corrosion.
- Chemical attack on the tower components.

WATER QUALITY LIMITS

Circulating water quality should be monitored on a daily basis and maintained with the following limits:

	Minimum	Maximum
Langlier Index	-0.50	+0.50
pH	6.5	7.5
CaSO4 (ppm)		1800
SiO2 (ppm)		100
Total Suspended Solids (ppm) for high-efficiency low fouling fill (Brentwood OF21 or similar)		200ppm with continuous bio-control 50ppm with poor bio-control

It should be noted that suspended solids in the circulating water must be fine granular solids and that there are no oils, fats or fibrous solids present.

CHEMICAL TREATMENT

In most cases, chemical treatment is required to prevent scale formation and corrosion. Sulfuric acid or one of the polyphosphates is generally used to control calcium carbonate scale. Various proprietary materials containing chromates, phosphates or other compounds are available for corrosion control. When water treatment chemicals are required, the services of reliable water treatment companies should be obtained.

Slime (a gelatinous organic growth), algae (a green moss), and many other microbes and fungal spores may grow in the cooling tower. A large variety of biocides, algaecides or slimicides are available for treatment of these conditions. Compounds containing copper or chloride should be used with caution to prevent damage to metal or wood compounds in the system.

WATER TREATMENT

Blow-down, or bleed-off, is the continuous removal of a portion of the water from the circulating system. Blow-down is used to prevent the dissolved solids from concentrating to the point of forming scale. The amount of blow-down required depends on the cooling range (the difference between the hot and cold temperatures) and the composition of the make-up water (water added to the system to compensate for losses by blow-down, evaporation and drift). The following calculation shows the amount of blow-down required to maintain different concentrations of the circulating water with various cooling ranges:

	A material balance on the water flow yields:
1.	Makeup (MU) = Blow Down (BD) + Evaporation (EV) + Drift Rate (DR)
	$MU = BD + EV + DR$ (equation 1)
2.	Evaporation (EV) = Range (RA) * (0.00095)
	$EV = RA * (0.00095)$ (equation 2)
3.	A material balance on the amount of dissolved solids in the system yields:
3a.	Where X% is the percentage of the flow which is dissolved solids
	NC is the number of cycles or "concentrations" of dissolved solids in the blow-down and drift
	$X\% * MU = X\% * NC * (BD+DR)$ (equation 3)
	This gives:
	$MU = NC * (BD+DR)$ (equation 3a)
4.	Substituting equation 2 and 3a into equation 1 and solving for the blow-down rate gives:
	$NC * (BD+DR) = DR + BD + 0.00095 * RA$ (equation 4)
5.	$BD (\%) = \frac{0.095 * RA}{(NC - 1)} - DR (\%)$ (equation 5)
6.	Thus, utilizing equation 5 above the blow down rate, as a percentage of circulating water flow, can be determined at various concentration levels. An example of which is shown below.
	Example: 20,000 GPM circulating rate, 24°F cooling range, 0.03% drift rate. To maintain three concentrations, the required blow-down is:
	$BD (\%) = \frac{0.095 * 24}{(3-1)} - 0.03\% = 1.11\%$
	or 0.0111 x 20,000 gpm = 222 gpm

MAINTENANCE INSTRUCTIONS

PRE-OPERATION MAINTENANCE INSTRUCTIONS

The following instructions are a CHECK LIST for the Owner to provide proper care and maintenance of tower components after tower completion until commercial operation.

COMPONENT	INSTRUCTIONS	DOCUMENTATION
1. Motors	Manually (or by power) rotate motor shafts weekly, at least 15 revolutions, until commercial operation. Check Motor Data section for lubrication requirements to ensure warranty remains intact. (Note: Owner, immediately prior to commercial operation, to remove bearing grease, clean bearings, and re-grease if Owner determines this is necessary.)	a.)_____*
2. Fans	Prior to commercial operation and at intervals not exceeding 6 months thereafter, check tightness of fan blade clamp hardware.	a.)_____*
3. Drive Shafts	Check drive shaft coupling every 6 months for cracked bushings, looseness of bolts, and misalignment.	a.)_____*
4. Gears	a. Operate each fan (half speed and/or full speed) for a three (3) hour minimum period monthly or recoat all interior surfaces of reduction gear with oil. Make sure oil level is at full mark at the reduction gear and that the external sight glass full mark will correspond with the full level at the housing sight glass of the reduction gear. *Note: Schedule fan runs during winter after visual inspection to avoid possible unbalance from ice or snow that may have previously accumulated on fan.*	a.)_____*
	b.) Maintain log sheets of daily inspection of gear oil line sight gauge to ensure proper oil level.	b.)_____*

*Owner to maintain log of this activity.

STANDARD OPERATING PROCEDURE

FOAMING

Foaming sometimes occurs when a new tower I put into operation. This type of foaming generally subsides after a relatively short period of operation. Persistent foaming can be caused by the concentration of certain combinations of dissolved solids or by contamination of the circulating water with foam causing compounds. Increasing the blowdown can sometimes minimize this type of foaming, but in some cases foam depressant chemicals must be added to the system. Foam depressants are available from a number of chemical companies.

IRON

Please note that if the level of iron in the circulating water quality is high it should be controlled to <0.5ppm to prevent deposition and microbiological induced corrosion. A reputable water treatment company should be consulted to advise on suitable limits, treatment regime and controls for the system.

MAINTENANCE INSTRUCTIONS

PERIODIC MAINTENANCE INSTRUCTIONS

UNIT MAINTENANCE

Well-maintained equipment gives the best operating results and the lowest maintenance cost. We recommend setting up a regular inspection schedule to insure effective operation of the cooling tower. ICS recommends that the Owner keeps a continuous lubrication and maintenance record for the cooling tower.

Hot Water Distribution: the distribution nozzles should be checked monthly for partial or total blockage. Remove any debris blocking nozzles. The nozzles must be kept in place and free of debris to assure proper water distribution. Be sure to protect the top of the fill media with plywood or other material to avoid damage from personnel walking on this surface. Damage to the fill could be detrimental to the thermal efficiency of the tower.

Tower Superstructure: keep any bolting to the concrete superstructure tight. Pay particular attention to bolts in the mechanical equipment supports.

Drive Shaft: check drive shaft alignment and condition of couplings every six months. See Drive Shaft Manual, for correcting misalignment, balancing or replacing parts.

Electric Motor: lubricate and maintain each electric motor in accordance with the manufacturer's instructions, Appendix E.2. If repair work is necessary, contact the nearest representative of the motor manufacturer.

Drift Eliminators: we recommend that the drift eliminators be kept clean by removing mosses, algae or muds that might accumulate on them. These accumulations increase the pressure loss through the drift eliminators and therefore are detrimental to tower efficiency. If the drift eliminators are accidentally damaged, it is necessary to make the repairs quickly to avoid excessive drift losses. It is not advisable to walk on the drift eliminators without planking to spread the load.

Fan: refer to the fan instructions that are enclosed in Appendix E.1. As a general rule, it is strongly recommended to check the torque of all bolts used for assembling the various fan elements, such as blades and hubs, during the second month after a new tower is put into operation. The torque shall be according to the value given in Appendix E.1 fan operating instructions. It is advisable to check this at least once a year.

MAINTENANCE INSTRUCTIONS

Do not climb on the blades or to use them as scaffolding support or a working platform. The blades must be kept clean in order to avoid unbalancing and vibration that may give rise to deterioration of the rotating parts.

For the same reason, do not keep a fan operating when one or several blades have been accidentally damaged. In case of vibration or motor shutdown due to electrical overload, check that the angle of the blades has not changed and is identical for each blade.

Basin: the air going through the cooling tower deposits a certain amount of dust/dirt which settles in the basin and causes the formation of a muddy deposit which must be regularly removed.

The frequency of this cleaning obviously depends on the quantity of dust contained in the air in the cooling tower In general, cleaning once a year should be done at a minimum.

In the case where, besides the air dust, the operating conditions cause additional materials to settle, more frequent cleaning will be required. Such additional material may enter the system either from the make-up water or by the cooling process.

Fan Stack: the fan stack is subjected to vibratory forces inherent to the fan (they generally cannot be measured without instruments). It is necessary to check the tightness of the fan stack bolts at least every 3-6 months.

Fill: the fill media should be inspected on a regular schedule based on the quality of the water that is being circulated. The inspection should include the removal of a piece to determine if algae or mud is building up. If algae growth is detected, please contact your water treatment company to control the problem. If the buildup is significant, it may be necessary to remove the fill media and clean or replace it. Please contact ICS for assistance should this become necessary.

The causes of deterioration of the fill are generally of the following nature:

- Those attributable to the quality of water.
- Those attributable to deposits and water overloads, (i.e. ice).
- Those attributable to high water concentrations resulting from a defect in the water distribution system (broken pipes or nozzles).

Reduction Gear: make daily and monthly oil checks. Inspect internal parts during seasonal oil change.

Painting: periodically clean and, if necessary, recoat all metal parts subject to corrosion.

Note: *Once during every shift it is advised to make a general inspection of the tower.*

MAINTENANCE INSTRUCTIONS

It is recommended that:

- Basin water level is checked.
- Gear box oil level is checked.
- Locate and check any suspect noise or vibration.
- A detailed logbook is kept for each cell (to be supplied by purchaser).

The above checks, etc. are the minimum we consider necessary for trouble free operation.

If after installation, regular operation is delayed pending completion of plant construction or if there are long idle periods between operating cycles, it is necessary to start the motor\gearbox\fan group every week for a period of 10 minutes to bring all inner parts of gearbox and the ball bearings into contact with the lubricant. If the motor is not electrically connected, the rotation must be done manually.

COOLING TOWER TROUBLESHOOTING

TROUBLE	CAUSE	REMEDY
Motor will not start	Power not available at motor terminals	⇒ 1. Check power at starter. Correct any connections between the control apparatus and the motor. 2. Check starter contact and control circuits. Reset overloads, close contacts, reset tripped switches, or replace failed control switches.
	Wrong connections	⇒ Check motor and control connections against wiring diagrams.
	Low voltage	⇒ Check nameplate voltage against power supply. Check voltage at motor terminals.
	Open circuit in motor winding	⇒ Check motor windings for open circuits.
	Motor or fan drive stuck	⇒ Disconnect motor from load and check motor and reduction gear for cause of problem.
	Rotor is defective	⇒ Look for broken bars or rings.

MAINTENANCE INSTRUCTIONS

Trouble	Cause	Remedy
Unusual motor noise	Motor running single-phase	⇒ Stop motor and attempt to start it. Motor will not start if single-phased. Check wiring, controls, and motor.
	Motor leads connected incorrectly	⇒ Check motor connections against wiring diagram on motor.
	Ball bearings	⇒ Check lubrication. Replace bad bearings.
	Electrical imbalance	⇒ Check voltages and currents of all three lines, correct if required.
	Air gap not uniform	⇒ Check and correct bracket fits or bearings.
	Rotor unbalanced	⇒ Rebalance.
	Fan hitting guard	⇒ Reinstall or replace fan and/or guard.
Motor runs hot	Motor overload, low voltage or unbalanced voltage	⇒ Check voltage and current of all three lines against nameplate values.
	Wrong Blade Pitch	⇒ See Appendix E.1 –Fan O&M and Cooling Tower Equipment Summary.
	Wrong motor rpm	⇒ Check nameplate against power supply. Check rpm of motor and gear ratio.
	Bearings over greased	⇒ Remove grease reliefs. Run motor up to speed to purge excess grease.
	Rotor rubs stator bore	⇒ If this is not due to poor machining, replace worn bearings.
	Wrong lubricant in bearings	⇒ Change to proper lubricant. See motor manufacturer's instruction and Appendix C - Lubricant List.

MAINTENANCE INSTRUCTIONS

Trouble	Cause		Remedy
	Unbalanced drive shaft or worn couplings	⇒	Make sure motor and reduction gear shafts are in proper alignment and "match marks" properly matched. Repair or replace worn couplings. Rebalance drive shaft by adding or removing weights from balancing cap screws. See Appendix E.5 - Drive Shaft O&M.
	Fan	⇒	Be sure blades have proper pitch and track. Make certain all blades are as far from the center of the fan as safety devices permit. All blades must be pitched the same. See Fan Service manual. Clean off deposit build-up on blades.
	Worn reduction gear	⇒	Check fan and pinion shaft bearings endplay. Replace bearings as necessary.
	Unbalanced motor	⇒	Disconnect load and operate motor. If motor still vibrates, rebalance rotor.
	Bent shaft	⇒	Check fan and pinion shafts with dial indicator. Replace if necessary.
Fan noise	Loose fan hub cover	⇒	Tighten hub cover fasteners.
	Blade rubbing inside of fan cylinder	⇒	Adjust cylinder to provide blade tip clearance.
	Loose bolts in blade clamps	⇒	Check and tighten if necessary.

MAINTENANCE INSTRUCTIONS

Trouble	Cause		Remedy
	One phase open	⇒	Stop motor and attempt to start it. Motor will not start if single-phased. Check motor wiring controls and motors.
	Poor ventilation	⇒	Clean motor and check ventilation openings. Allow ample ventilation.
	Winding fault	⇒	Check with ohmmeter.
	Bent motor shaft	⇒	Straighten or replace shaft
	Insufficient grease	⇒	Remove plugs and re-grease bearings.
	Deterioration of grease or foreign material in grease	⇒	Flush bearings and re-lubricate.
	Bearings damaged	⇒	Replace bearings.
Motor does not come up to speed	Voltage too low at motor terminals because line drop.	⇒	Check transformer and setting of taps. Use higher voltage on transformer terminals or reduce loads. Increase wire size or reduce inertia.
	Broken rotor bars	⇒	Look for cracks near the rings. A new rotor may be required. Authorized person check motor.
Wrong rotation (motor)	Wrong sequence of phases	⇒	Change any two of the three motor leads.
Reduction Gear noise	Reduction gear bearings	⇒	If new, see if noise disappears after one week of operation. Drain, flush, and refill reduction gear. See Appendix E.4 Reduction Gear O&M. If still noisy, replace bearings.
	Gears	⇒	Correct tooth engagement. Replace badly worn gears. Replace gears with imperfect tooth spacing or form.
Unusual fan drive vibration	Loose bolts and cap screws	⇒	Tighten all bolts and cap screws on all mechanical equipment and supports.

MAINTENANCE INSTRUCTIONS

FILL AND DE INSPECTION

FILL

Inspection of the fill packs in the cooling tower can be completed from the fill layer. Plywood boards should be placed in a walkway arrangement as you cross the fill layer. This temporary access layout will also provide viewing access of the distribution laterals and nozzles from underneath.

Example photos of fill layer temporary plywood walkway for inspections:

MAINTENANCE INSTRUCTIONS

EQUIPMENT STORAGE

MOTOR STORAGE

1. EQUIPMENT MUST BE KEPT CLEAN
   - Store indoors.
   - Keep covered to eliminate airborne dust and dirt.
   - Cover openings for ventilation, conduit connections, etc., to prevent entry of rodents, snakes, birds, and insects, etc.
2. EQUIPMENT MUST BE KEPT DRY
   - Store in a dry area.
   - Temperature swings should be minimal to prevent condensation.
   - Space heaters are recommended to prevent condensation. (Connect heaters to proper VAC under temperature swing conditions.).
   - Treat unpainted flanges, shafts, and fittings with a rust inhibitor.
   - Check insulation resistance before putting motor into service.
3. KEEP BEARINGS LUBRICATED
   - Once per month, rotate shaft several turns to distribute grease in bearings.
   - If unit has been stored more than one year, add grease before start-up.

GEAR BOX STORAGE

SHORT TERM STORAGE - *Note:* *Dry heated indoor storage is recommended*

Each unit is tested and protected before leaving the factory for any reasonable storage condition or time. Units that are to be exposed to extreme temperature variations or to high relative humidity while being stored for extended lengths of time will require special care. See the recommendations for long-term storage.

LONG TERM STORAGE - *Note:* *Dry heated indoor storage is recommended*

Spray internal parts with rust-prevention oil that is soluble with lubricating oil or add a vapor phase rust inhibitor to the oil as recommended by its manufacturer. Protect all outside surfaces with rust-prevention oil. Place the unit in a vapor tight bag or container or seal all vent openings. All cooling tower drives are furnished with a vent plug located on the top of the unit. Seal this vent by applying duct tape around the base of the plug. Sealed unit should be stored in a shipping crate.

INACTIVE DRIVES

Units that are operated seasonally, or used only as standby, should be protected by adding a vapor phase rust inhibitor to the oil in the amounts recommended by the manufacturer. The unit should be checked every 3-4 months, more rust inhibitor added and any water that may have formed from condensation should be drained.

Load Test – OF-21MA
7/29/02 Test

Test Summary & Recommended Bearing Work-up

Test No.	Pack ID	Sheet Finished Gage (mils)	Support System (see dwg below)	Max. Comp. Strength (lb)	Prop. Elastic Limit (lb)	Ratio	Beam Bearing Surf. Area (sf)	Max. Comp. Strength (psf)	Prop. Elastic Limit (psf)	Recommended Bearing (psf)			
										Temp. Factor 1.2	Creep Factor 1.1	Safety Factor 1.5	Safety Factor 2
1	M1	15	A	556	480	0.863	0.375	1483	1280	1067	970	646	485
2	M2	15	A	540	484	0.896	0.375	1440	1291	1076	978	652	489
3	M3	15	A	564	468	0.830	0.375	1504	1248	1040	945	630	473
4	M4	15	A	544	500	0.919	0.375	1451	1333	1111	1010	673	505
	Avg.	**15**	**A**	**551**	**483**	**0.877**	**0.375**	**1469**	**1288**	**1073**	**976**	**651**	**488**
	Std. Dev.			**11**	**13**	**0.039**		**29**	**35**				
5	R1	10	A	244	210	0.861	0.375	651	560	467	424	283	212
6	R2	10	A	260	204	0.785	0.375	693	544	453	412	275	206
7	R3	10	A	264	237	0.898	0.375	704	632	527	479	319	239
	Avg.	**10**	**A**	**256**	**217**	**0.848**	**0.375**	**683**	**579**	**482**	**438**	**292**	**219**
	Std. Dev.			**11**	**18**	**0.058**		**28**	**47**				
8	M5	15	B	1580	1440	0.911	0.750	2107	1920	1600	1455	970	727
9	M6	15	B	1444	1320	0.914	0.750	1925	1760	1467	1333	889	667
10	M7	15	B	1552	1460	0.941	0.750	2069	1947	1622	1475	983	737
	Avg.	**15**	**B**	**1525**	**1407**	**0.922**	**0.750**	**2034**	**1876**	**1563**	**1421**	**947**	**710**
	Std. Dev.			**72**	**76**	**0.016**		**96**	**101**				
11	R4	10	B	600	566	0.943	0.750	800	755	629	572	381	286
12	R5	10	B	796	710	0.892	0.750	1061	947	789	717	478	359
13	R6	10	B	788	660	0.838	0.750	1051	880	733	667	444	333
	Avg.	**10**	**B**	**728**	**645**	**0.891**	**0.750**	**971**	**860**	**717**	**652**	**435**	**326**
	Std. Dev.			**111**	**73**	**0.053**		**148**	**97**				

Table 1

SUPPORT SYSYTEM A

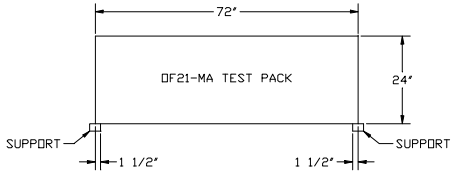

SUPPORT SYSYTEM B

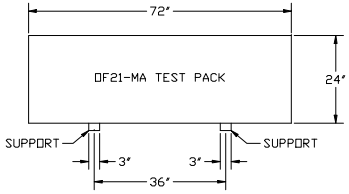

BRENTWOOD INDUSTRIES

CRUSH DATA FOR FILL PACKS

APPENDICIES

APPENDIX A

COOLING TOWER EQUIPMENT SUMMARY

DRIFT ELIMINATOR

To inspect the drift eliminator (DE) packs, the maintenance operator should open the access hatch and view if any packs are out of place. If a more in-depth cell interior inspection is required, the maintenance operator can access the cell interior by use of the cooling tower cell access ladder and temporarily place plywood to get to the closest concrete beam. From this point the maintenance operator can remove the DE across a concrete beam row and walk along the beam for additional viewing/inspection in the cell.

Example photos of DE layer concrete beam access for inspections are shown below:

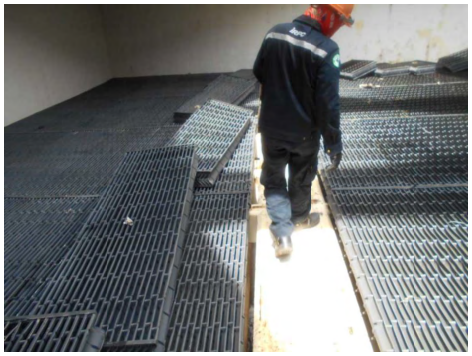

Vibration Switch	Manufacturer: IMI	3
	Model: 685B0001A11	
	Please see Vibration Switch Drawing and Data submittal for additional specs	
Fill	Manufaturer: Brentwood	
	Model: OF21ma	
	Material: PVC	
	Volume: 660 m^3/tower	
	Mechanically Joined	
Drift Eliminator	Manufaturer: Brentwood	
	Model: CF150MAx	
	Material: PVC	
Distribution Piping	Manufacturer: Nawatech Engineering	
	Lateral Lines Diameter: 6"	
	Lateral Lines Material: PVC	
	Nozzle Material: ABS	
Hardware	Material: Stainless Steel, HDG	

ICS Doc #:12915-GBL-DOC017
Owner Doc #: ICS-GBL-002-M-090-205

GBL Overall Equipment List

Equipment	Description	Quantity
Motor	Motor Model: 3GBP3122220-ADG	3
	Manufacturer: ABB	
	Power: 110kW	
	Type: M3BP 315SMB 4G	
	Service Factor: 1.0	
	Speed: 1484 RPM	
Gear	Gearbox Model: Amarillo 1311	3
	Reduction Ratio: 8:1	
	Service Factor: 2.32	
Drive Shaft	Model: LRA650.425SS	3
	Manufacturer: ADDAX	
	Material: SS316 & Composite	
Fan	Manufacturer: Hudson	3
	Model: APT-22K	
	No. of Blades: 6	
	Type: Axial Fan	
	Speed Nominal: 185.8 rpm	
	Hub M.O.C: HDGS with SUS304 Hardware	
	Diameter: 6705mm	
Fan Stack	Manufacturer: HAC (Hoang Anh Composites)	3
	Diameter: 22 ft (6705 mm)	
	Height: 9'-0"	
	Materials: FRP	

APPENDICIES

APPENDIX B

RECOMMENDED 2-YEAR OPERATIONAL SPARE PARTS

GBL

VENDOR SHALL PREPARE THIS LIST, INDIVIDUALLY, FOR EACH PROJECT.

Gulf MP TOYO PÖYRY

FORM 6.2

Spare Parts List for Mandatory (2 Years Operation)

OWNER : **Gulf MP Company Limited**

VENDOR NAME / EQUIPMENT&MATERIAL NAME : Industrial Cooling Solutions- Cooling Tower

APPLIED PROJECT : GBL

REQUISITION No : GXEF001

MANUFACTURER'S / SUPPLIER'S SPARE PARTS DATA

SERIAL NUMBER	NO. OF UNITS	EQUIPMENT REG. OR TAG NO.	DESCRIPTION OF PARTS (within 40 digits)	MATERIAL SPECIFICATION	DRAWING NO. INCLUDING POSITION OR ITEM NUMBER	NAME OF SUB-SUPPLIER OR BRAND NAME OR REMARKS	PARTS NO.		UNIT OF MEASURE	QUANTITY	Remarks
							EQUIPMENT MANUFACTURER PARTS NO.	SUB-SUPPLIER PARTS NO.			
1	2	3	4	5	6	7	8	9	10	11	12
1	1	NA	Fill Pack Sheets, unassembled	PVC	G-200	Brentwood or equal	OF21MA	N/A	pc	1589	
2	1	NA	Drift Eliminator Pack Sheets & End Caps, unassembled	PVC	G-200	Brentwood or equal	CF150Max	N/A	pc	289	
3	1	NA	SP Nozzles, 1 1/4" orifice	Polypropylene	C-200	CE Shephard or equal	114CNTREUPPT	N/A	pc	22	
4											
5											
6											
7											
8											
9											
10											
11											
12											
13											
14											
15											
16											
17											
18											
19											
20											

ICS USA Office
1457 Ammons Street, Suite 206, Lakewood, CO 80214
Tel. +1 (303) 462-2000, Fax. +1 (303) 984-2699
www.h2ocooling.com

ICS Thailand Office
9th Floor Serm-Mit Tower, 159 Sukhumvit 21, Asoke Road
North Klongtoey, Wattana, Bangkok, 10110
Tel. +66 (0) 2260-6598, Fax. +66 (0) 2260-6599

APPENDICIES

APPENDIX C
LUBRICATION LIST

ICS USA Office
1457 Ammons Street, Suite 206, Lakewood, CO 80214
Tel. +1 (303) 462-2000, Fax. +1 (303) 984-2699
www.h2ocooling.com

ICS Thailand Office
9th Floor Serm-Mit Tower, 159 Sukhumvit 21, Asoke Road
North Klongtoey, Wattana, Bangkok, 10110
Tel. +66 (0) 2260-6598, Fax. +66 (0) 2260-6599

GBL

Lubricant List

VENDOR SHALL PREPARE THIS LIST, INDIVIDUALLY, FOR EACH PROJECT.

OWNER : **Gulf MP Company Limited**
PROJECT : **GBL**
PURCHASER'S Work No. : BC-0231-21
VENDOR'S Work No.: 12915

Project Doc. No.: ICS-GBL-002-M-090-217
Vendor Doc. No.: 12915-GBL-DOC018
Requisition No.: GXEF001

LUBRICANTS LIST For Equipment (For Vendor Quotation) Materials)

8/17/2017

Req. No.	Vendor's Name	Tag No.	Equipment Description	Brand	Type	Recommended Oil/Grease	Equivalent Brand & Item		ISO Viscosity	Location	Duration (hr)		Quantity	Unit	Equipment (Quantity (X Number)	Required Quantity for Quotation (Initial Fill and One Month Initial Operation:720hr)	Unit	Vendor Quotation	
							XXXX	XXXX			Initial Running	Normal						Unit Price (Thai BHT)	Sub Toal Price (Thai BHT)
Gear Oil																			
GXEF001	Amarillo		Gear 1311	Atlantic Richfield Co.	Mineral Oil	Duro 220	Chevron/Texaco	Rando HD 220	220	Gear Box	500/4 weeks	2500/6 months	53	liter	x 3	159	liter		
			Oil Line	Atlantic Richfield Co.	Mineral Oil	Duro 220	Chevron/Texaco	Rando HD 220	220	Gear Box	500/4 weeks	2500/6 months	6	liter	x 3	18	liter		
														liter	X Nos		liter		
														liter	X Nos		liter		
															X Nos		liter		
															X Nos		liter		
													Brand A Oil Total			177	liter	90.0	159300
Motor Grease																			
GXEF001	ABB		Motor M3BP 315 SMB 4G	Mobil Mobilith SHC 100		Mobil Unirex N2, N3, or S2	Kluber Kluberplex BEM 41-132	Mobil Gadus S5 V 100 2	Total Multis Complex S2	DE Motor Bearing	7600	7600	55g each end	g	x 3	165	g		
										NDE Motor Bearing	7600	7600	55g each end	g	x 3	165	g		
			*Check Lubrication Nameplate on Motor to verify type and quantities											g	X Nos		g		
														g	X Nos		g		
														g	X Nos		g		
														g	X Nos		g		
													Brand X Grease Total			330.0	g	6	1980
													(A) LUBOIL TOTAL						
													(B) GREASE TOTAL						
													(A) + (B) GRAND TOTAL						

Remarks: Vendor Quotation prices are subject to change.

APPENDIX E.1

FAN

APPENDICIES

APPENDIX E

MECHANICAL EQUIPMENT

ICS USA Office
1457 Ammons Street, Suite 206, Lakewood, CO 80214
Tel. +1 (303) 462-2000, Fax. +1 (303) 984-2699
www.h2ocooling.com

ICS Thailand Office
9th Floor Serm-Mit Tower, 159 Sukhumvit 21, Asoke Road
North Klongtoey, Wattana, Bangkok, 10110
Tel. +66 (0) 2260-6598, Fax. +66 (0) 2260-6599

RECOMMENDED TOOLS

- Long T-Handle Allen Wrench Set (3/16" to 3/8")
- Medium Size Flat Head Screw Driver
- Brass Ball Peen Hammer
- Flat Bastard File
- 240 Grit Sand Paper
- Anti-Seize Lubricant
- WD-40
- 12" Crescent Wrench
- Shop Towels
- Exact-A-Pitch® Digital Protractor (P/N 62375)
- 25 ft. Measuring Tape
- Pencil or Marker
- Open/Box End Wrench Set (1/2" - 1-1/2")
- Socket Set for 1/2" Drive (1/2" - 1-1/2")
- Torque Wrench(s) Rated for 0-200 ft-lb.

INSTALLATION PROCEDURES

ASSEMBLY WITH BUSHING

Clean all mating surfaces between hub, bushing and shaft. All grease and lubricant should be removed, leaving the mating surfaces dry.

If there is no shoulder on shaft to prevent bushing from sliding down shaft, slide spacer/sleeve (not provided) on shaft before bushing or use a thrust retainer (optional equipment) on top of hub. Slide bushing and key onto shaft until flush with end of shaft. The shaft size determines the bushing type (R2, S2, or U1). Lock bushing on shaft by tightening the set screw in flange with an Allen Wrench. Line up key and set hub on bushing. Engage the three (3) cap screws in flange of bushing into hub spool, using a torque wrench with a socket, and tighten evenly. Use the following table to determine the proper tools and torque values.

Bushing Size	Allen Wrench Size	Cap Screw Size	Socket Size	Torque (ft-lb) Dry
R2	3/16"	3/8"	9/16"	29
S2	3/16"	1/2"	3/4"	70
U1	3/16"	5/8"	15/16"	140

ASSEMBLY WITH STRAIGHT SHAFT (NO BUSHING)

Clean all mating surfaces between the hub and the shaft. If there is no shoulder on shaft to prevent hub from sliding down shaft, slide spacer/sleeve (not provided) on shaft before hub or use a thrust retainer (optional equipment) on top of hub. Install key in shaft. Line up key and keyway and set hub on shaft. Tighten set screw(s) in hub.

ASSEMBLY WITH TAPERED SHAFT (NO BUSHING REQUIRED)

Clean all mating surfaces between the hub and shaft.

Align keyways and install hub. Install retainer plate and cap screw(s) with lock washer(s). Shaft size determines what size cap screw is necessary. Using a torque wrench with a socket, evenly tighten cap screw to recommended standard per table below.

Cap Screw Size	Socket Size	Torque Value (ft-lb)	
		Lubricated	Dry
5/8" NC	15/16"	100	110
3/4" NC	1-1/8"	125	130
1" NC	1-1/2"	150	160

NOTE: Retaining arrangement varies with gear shaft design.

HUDSON Products Corporation

Tuf-Lite III® Fans 5000K Series Hub

INSTALLATION MANUAL

Adjustable Pitch Fan Assembly 20' thru 30' Diameter

Hudson Tuf-Lite III® fan blades

Hudson Tuf-Lite III® fan blades are of single piece fiberglass reinforced plastic (FRP) construction optimized for performance, reliability, noise, and cost effectiveness. Tuf-Lite III® fan blades are constructed of light weight, corrosion-resistant, fiberglass reinforced vinyl-ester resin, with materials, thickness, and processes determined from finite element analysis modeling. Tuf-Edge® leading edge erosion and UV protection is a standard with this blade.

The individually balanced blades can be replaced independently - matched sets are not required.

THRUST RETAINER (optional equipment)

Install proper load bolt (not provided) into top of fan shaft and tighten (See Figure 1). Install thrust retainer channel on top hub plate using existing hub spool cap screws. Torque cap screws to 60-65 ft-lb. Install thrust retainer eyebolt and jam nut. Hand tighten eyebolt. Tighten jam nut securely against top of thrust retainer channel.

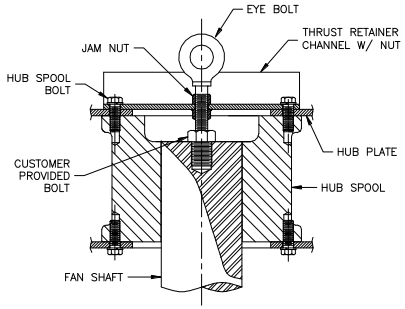

Figure 1

BLADE INSTALLATION

Remove blade clamp bolts, nuts, lock washers, and blade clamp halves from hub. Assemble blade clamp halves over groove in blade neck, and install into hub (See Figure 2). The thick leading edge will be to your left and thin trailing edge will be to your right as you stand at end of blade.

Figure 2

Install clamp bolts through hub plates and blade clamp, putting bolt heads on top, lock washers and nuts on bottom. Tighten lightly (See Figure 3).

Figure 3

SET PITCH AND TRACK

Use Hudson EXACT-A-PITCH® digital protractor (See Figure 4) or a bubble protractor to set blade pitch. Mount protractor on a flat bar as a base and place it approximately 1" from tip of blade. Note pitch on protractor. Rotate fan 360°, noting high and low pitch readings. Locate place where pitch reading is at mid-point between high and low readings, and set pitch at that point.

Figure 4

Rotate blade in clamp until digital protractor shows specified pitch angle to within +/-0.2°. *Fan pitch angle is shown on fan specification sheet for design duty.* After desired pitch angle is set, raise and lower end of fan blade and find midpoint of blade travel. Hold blade at the midpoint. Pull blade outward so that the blade neck flange rests against the back of the blade clamps. Push blade to the right to remove all slack.

Use torque wrench to tighten clamp bolts to 120 ft-lb (lubricated) or 130 ft-lb (dry). Re-check pitch setting. Blade must be set within +/-0.2° of desired pitch angle. Tighten clamp bolts evenly. ***DO NOT OVER-TORQUE CLAMP BOLTS.***

When bolts are tightened, hold a pencil against top end of blade and mark the level onto a fixed object, such as a pole or the fan ring.

Install remaining blades at same place as first blade, following the instructions above. After tightening bolts, mark top end of each blade in same place first blade was marked. If marks differ by 1" or more, adjust blade.

CHECK TRACK

After fan is installed in fan stack cylinder ring, outline top side of each blade onto fan stack cylinder ring with a marker (See Figure 5). The difference between levels of highest and lowest outlines should not be more than 1". Correct blade track by loosening clamp bolts and adjusting blade to match track of other blades. Re-tighten bolts and re-check track and pitch angle setting. Re-tighten blade clamp bolts to recommended standard of 100 ft-lb (lubricated) or 125 ft-lb (dry) torque.

Figure 5

SEAL DISC ASSEMBLY & INSTALLATION

Install self adhesive rubber gaskets on both flanges of one seal disc half. Bolt two halves of seal disc together, using 3/8" NC bolts, flat washer, lock washer, and nut. Torque to 15 ft-lb (lubricated) and 20 ft-lb (dry).

Install 3/8" NC bolts at six (6) places on top hub plate (See Figure 6). Threaded portion of bolts must be pointing up to mount seal disc. Install lock washer, nut, and flat washer on each bolt. Tighten 3/8" NC nuts to 15 ft-lb (lubricated) and 20 ft-lb (dry).

Locate the six (6) mounting holes in seal disc and install over the six (6) bolts pointing up on upper hub plate. If difficulty is encountered, loosen bolts on seal flanges until seal disc can be mounted, then re-tighten to 15 ft-lb (lubricated) or 20 ft-lb (dry).

NOTE: The purpose of the seal disc is to prevent hot air from recirculating back down through the hub, increasing efficiency.

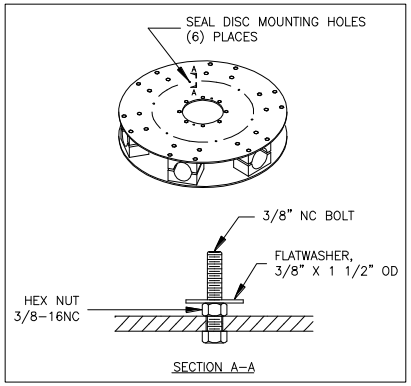

Figure 6

PART LIST
HUDSON PRODUCTS CORPORATION
Adjustable Pitch Fan Assembly 20' thru 30' Diameter
Series 5000K HUB

				NO. OF BLADES						
ITEM	DESCRIPTION	TYPE	PART. NO	6	7	8	9	10	11	12
	Up to 3.62" Diameter Shaft	R-2	Hub Assy. No. Part. No.	5206 H5400	5207 H5410	5208 H5420	5209 H5420	5210 H5440	5211 H5450	5212 H5460
	3.68" Diameter thru 4.19" Diameter Shaft	S-2	Hub Assy. No. Pat No.	5306 H5300	5307 H5310	5308 H5320	5309 H5330	5310 H5340	5311 H5350	5312 H5360
	4.25" Diameter thru 5.50" Diameter Shaft	U-1	Hub Assy. No. Part No.	5806 H5600	5807 H5610	5808 H5620	5809 H5630	5810 H5640	5811 H5650	5812 H5660
1	Hub Plate (2 Per Hub)	R-2 & S-2 U-1	Part. No. Part No.	C5282 C5283	61512 61521	C5282 C5283	61514 61523	61515 61524	61516 61525	C5282 C5283
ITEM	DESCRIPTION	TYPE	PART. NO	QUANTITY PER ASSEMBLY						
2	Hub Spool	R-2 S-2 U-1	65050 65055 65038	1	1	1	1	1	1	1
3	Bushing	R-2 S-2 U-1	Specify Bore	1	1	1	1	1	1	1
4	Blade Clamp Half, Powder Epoxy Coated Die Cast Alum. (Standard) Option 1: Powder Epoxy Coated Ductile Iron** Option 2: Coal Tar Epoxy Coated Ductile Iron**		D5131 65013 65013C	12	14	16	18	20	22	24
5	Blade Clamp Bolt W/ Nut 3/4"-10 x 10" (Mech. Galv.)		79299	24	28	32	36	40	44	48
6	3/4" Lock washer (Mech. Galv.)		73738	24	28	32	36	40	44	48
7	Hub Spool Cap Screw 5/8"-11 x 1 1/2"(316 SS)		72402	16	16	16	16	16	16	16
8	5/8" Lock washer (316 SS)		73731	16	16	16	16	16	16	16
9	Pin, Grooved, 1/2" X 1-1/2 "		74540	4	4	4	4	4	4	4
10	76" Diameter "K" Seal Disc Kit *		D5177	1	1	1	1	1	1	1
11	Tuf-Lite III® Blade (Teal Green)		(Varies)	6	7	8	9	10	11	12

* Includes all hardware (316 SS) to assembly and mount.
** Recommended on concrete and round towers, or corrosive environments. Contact Hudson for pricing.

STANDARD MATERIALS & FINISHES

Blades: Fiberglass reinforced vinyl ester
Hub Spool: Ductile Iron, Zinc Rich Coating
Plates: Steel, Galvanized
Bushing: Malleable Iron
Seal Disc: Fiberglass Reinforced Polyester

Blade Clamps:
Powder Epoxy Coated Die Cast Alum (Standard)
Powder Epoxy Coated Ductile Iron (Option 1)
Coal Tar Epoxy Coated Ductile Iron (Option 2)
Fasteners:
Steel, Mech. Galvanized & 316 SS Opt.
Complete Fan with 316 SS (Option 1)
Complete Fan with K500 Monel (Option 2)

WHEN ORDERING, SPECIFY FAN DIAMETER, TYPE & NUMBER OF BLADES & SHAFT DIAMETER

EXAMPLE: APT — 28K — 8 — 3 1/2" BORE

APT	28K	8	3 1/2" BORE
Fan Model Adjustable Pitch	Fan Diameter & Blade Type (Specify "K for Tuf-Lite III® Blades)	Number of Blades	Shaft Diameter

After mounting, install flat washer, lock washer, and 3/8" NC nuts. Tighten to 15 ft-lb (lubricated) or 20 ft-lb (dry). (See Figure 7)

Note: Refer to instructions included with seal disc for further details.

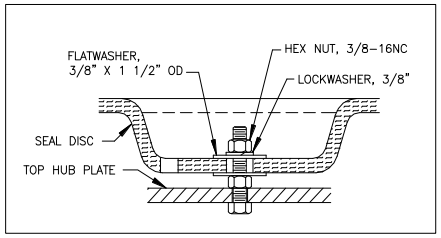

Figure 7

CHECKING TIP CLEARANCE

Rotate fan in position inside fan stack to check tip clearance (See Figure 8). The recommended tip clearance is between 1" and 1 1/2". Check for spots where fan blade clearance is not within the recommended tolerance. If necessary, adjust fan stack by shimming to obtain proper clearance.

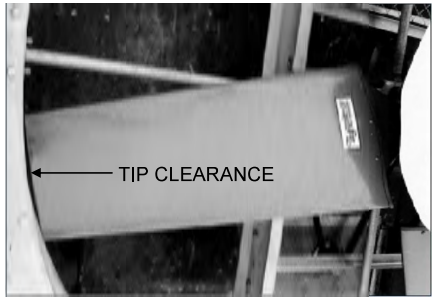

Figure 8

OPERATING INSTRUCTIONS

Start fan and check rotation. Viewed from top (discharge), fan blades should rotate clockwise.

Hudson recommends to re-verify the blade clamp torque after the initial 10-15 minutes of cold operation (i.e., the fan doesn't need to be exposed to the working temperature of the process). This will ensure that the blades are settled within the clamps after the centrifugal forces have acted.

Check motor power consumption to be sure fan is pulling desired load. *CAUTION: If positive pitch is set in summer to use all available motor amps (nameplate rating), motor could be overloaded in winter.* Design pitch angles usually do not use all of the available motor horsepower. This ensures that the motors will not be overloaded at low winter temperatures.

For the fans that have remained idle (such as a shut-down or turn-around), it is highly recommended to re-verify the torque on the blade clamps before putting it back into operation.

HUDSON
Products Corporation

9660 Grunwald Rd.
Beasley, Texas 77417-8600
Phone: 281-396-8100
Fax: 281-396-8388
1-800-634-9160 (24 Hours)
EMAIL: hudsonproducts@hudsonproducts.com
http://www.hudsonproducts.com

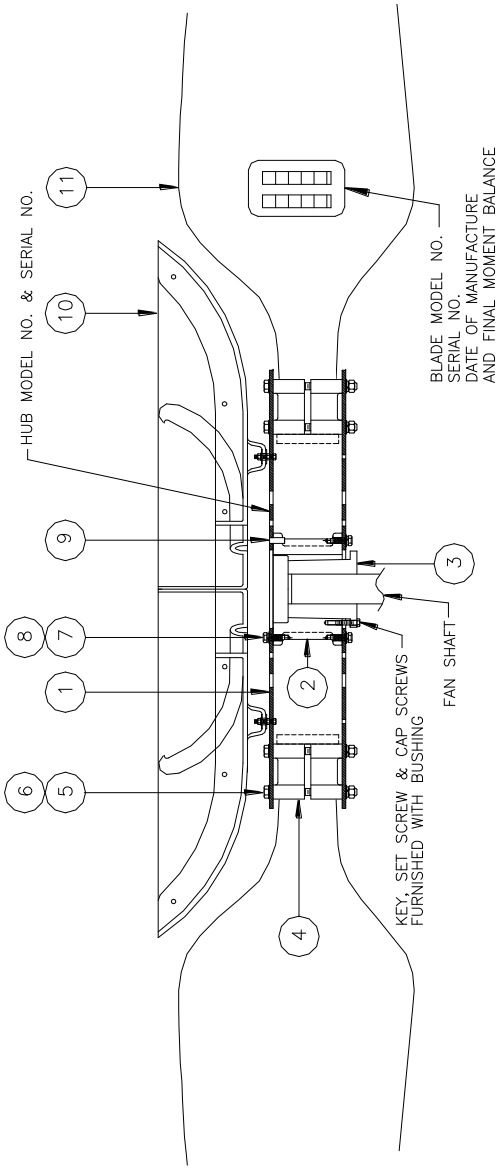

Hudson, Auto-Variable, Combin-Aire, Exact-A-Pitch, Fin-Fan, Heatflo, Hy-Fin, Split-Flo, Solo Aire, Stac-Flo, Steamflo, Thermflo, Tuf-Edge, Tuf-Lite, Tuf-Lite II, and *Tuf-Lite III* are registered trademarks of Hudson Products Corporation.

©2012 Hudson Products Corp. All Rights Reserved.

ภาคผนวก ข-12

เอกสารอบรมด้านอาชีวอนามัยและความปลอดภัยในการทำงาน

GULF

ใบรายงานผลการฝึกอบรมภายใน (Training Report)

หลักสูตร Course : ESMS-Sa-P-17_Personal Protective Equipment	วันที่ Date : 25 August 2023 เวลา Time : 09.00 ถึง to : 09.30
ส่วนงาน : All GBL	รวมระยะเวลา Period : ชั่วโมง : นาที Hrs.: Sec.
สถานที่ Place : MS Team	วิทยากร Trainer : Adisak Chertchuwongtanakorn

ประเภทการอบรม : Training Type
- [x] อบรมทั่วไป (General)
- [ ] อบรมหน้างาน (OJT)

การประเมินผล Evaluation Method
- [x] การสอบถาม (Question)
- [ ] แบบทดสอบ (Test)
- [ ] ปฏิบัติจริง (Implement)

ที่ No.	ชื่อ - สกุล Name - Surename	งาน / ส่วนงาน Department / Division	ผลการประเมิน Result	ลายมือชื่อ Signature เช้า (Morning)	บ่าย(Afternoon)
1		GA	3		-
2		MTN	3		-
3		MTN	3		-
4		MTN	3		-
5		MTN	3		-
[illegible]		MTN	3		-
7		MTN	3		-
8		MTN	3		-
9		MTN	3		-
10		MTN	3		-
11		OPT	3		-
12		OPT	3		-
13		OPT	3		-
14		OPT	3		-
15		OPT	3		-
16		OPT	3		-
17		OPT	3		-
18		OPT	3		-
[illegible]		OPT	3		-
20		OPT	3		-
21		OPT	3		-
22		OPT	3		-
23		OPT	3		-
24		OPT	3		-

หมายเหตุ : ผ่านเกณฑ์ = ระดับ 2 (ในกรณีที่ต่ำกว่าระดับ 2 ต้องทำการประเมินใหม่ภายในระยะเวลา 6 เดือน)

Remark : Passed = level 2 (In case of "under level 2 shall be re-evaluattion within 6 months)

Instructor Signed : Oohhs

- ระดับ 1 (Level 1) หมายถึง (Means) สามารถปฏิบัติงานโดยมีผู้ควบคุม (Only working - helper)
- ระดับ 2 (Level 2) หมายถึง (Means) สามารถปฏิบัติงานได้ แต่ยังไม่สามารถตัดสินใจได้ (Can be working but can't solve the problem)
- ระดับ 3 (Level 3) หมายถึง (Means) สามารถปฏิบัติงาน แก้ไขปัญหาหรือตัดสินใจได้ (Can be working and solve the problem)
- ระดับ 4 (Level 4) หมายถึง (Means) มีความเข้าใจดีมาก ปฏิบัติงานได้ดี ตัดสินใจได้ และสอนผู้อื่นได้ (Excellance Working and to be trainer)

GULF
Ban Lane

Activity : 2nd ESMS Audit by SHE Management

Date : 12 September 2023

Time : 09.00 - 16.00 hrs.

No.	Company	Name - Surname	Position	Signature	Remark
1	GBL	[redacted]	SHE mgr	[redacted]	
2	GED		SHE		
3	GED		SHE		
4	GED		SHE		
5	GED		SHE		
6	GBL		GA		
7	GBL		GA Sup.		
8	GBL		PM		
9	GBL		LT		
10	GBL		MT		
11	GBL		ME		
12	GBL		MM		
13	GBL		MM		
14	GBL		ME		
15	GBL		OPT Mgr.		
16	GBL		OPT (SL.).		
17	GBL		OPT		
18	GBL		OPT		
19	GBL		MT		
20	GBL		WH		
21	GBL		OPT		
22	GBL		Chemist		
23					
24					
25					
26					
27					
28					
29					

Remarks : This registration will be reference and keep records.

GULF

ใบรายงานผลการฝึกอบรมภายใน (Training Report)

หลักสูตร Course : ESMS-Sa-P-31_Fire Pump, Sprinklers, Fixed and Detection System	วันที่ Date : 18 August 2023 เวลา Time : 09.00 ถึง to : 09.30
ส่วนงาน : All GBL	รวมระยะเวลา Period : ชั่วโมง : นาที Hrs.: Sec.
สถานที่ Place : MS Team	วิทยากร Trainer : Udom Ladsumrong

ประเภทการอบรม : Training Type ☑ อบรมทั่วไป (General) ☐ อบรมหน้างาน (OJT)

การประเมินผล Evaluation Method ☑ การสอบถาม (Question) ☐ แบบทดสอบ (Test) ☐ ปฏิบัติจริง (Implement)

ที่ No.	ชื่อ - สกุล Name - Surename	งาน / ส่วนงาน Department / Division	ผลการประเมิน Result	ลายมือชื่อ Signature เช้า (Morning)	บ่าย (Afternoon)
1	[redacted]	MGR	4	[redacted]	-
2	[redacted] orn	SHE	4	[redacted]	-
3	[redacted]	GA	3	[redacted]	-
4	[redacted]	GA	3	[redacted]	-
5	[redacted]	MTN	4	[redacted]	-
6	[redacted]	MTN	4	[redacted]	-
7	[redacted]	MTN	3	[redacted]	-
8	[redacted]	MTN	3	[redacted]	-
9	[redacted]	MTN	3	[redacted]	-
10	[redacted]	MTN	3	[redacted]	-
11	[redacted]	MTN	3	[redacted]	-
12	[redacted]	MTN	3	[redacted]	-
13	[redacted]	MTN	3	[redacted]	-
14	[redacted]	MTN	3	[redacted]	-
15	[redacted] na	OPT	4	[redacted]	-
16	[redacted]	OPT	3	[redacted]	-
17	[redacted]	OPT	3	[redacted]	-
18	[redacted]	OPT	3	[redacted]	-
19	[redacted]	OPT	3	[redacted]	-
20	[redacted]	OPT	3	[redacted]	-
21	[redacted]	OPT	3	[redacted]	-
22	[redacted]	OPT	3	[redacted]	-
23	[redacted]	OPT	3	[redacted]	-
24	[redacted]	OPT	3	[redacted]	-
25	[redacted]	OPT	3	[redacted]	-
26	[redacted]	OPT	3	[redacted]	-
27	[redacted]	OPT	3	[redacted]	-
28	[redacted]	OPT	3	[redacted]	-

หมายเหตุ : ผ่านเกณฑ์ = ระดับ 2 (ในกรณีที่ต่ำกว่าระดับ 2 ต้องทำการประเมินใหม่ภายในระยะเวลา 6 เดือน)

Remark : Passed = level 2 (In case of "under level 2 shall be re-evaluattion within 6 months)

Instructor Signed : อดม ลัสสุ

- ◔ ระดับ 1 (Level 1) หมายถึง (Means) สามารถปฏิบัติงานโดยมีผู้ควบคุม (Only working - helper)
- ◑ ระดับ 2 (Level 2) หมายถึง (Means) สามารถปฏิบัติงานได้ แต่ยังไม่สามารถตัดสินใจได้ (Can be working but can't solve the problem)
- ◕ ระดับ 3 (Level 3) หมายถึง (Means) สามารถปฏิบัติงาน แก้ไขปัญหาหรือตัดสินใจได้ (Can be working and solve the problem)
- ● ระดับ 4 (Level 4) หมายถึง (Means) มีความเข้าใจดีมาก ปฏิบัติงานได้ดี ตัดสินใจได้ และสอนผู้อื่นได้ (Excellance Working and to be trainer)

GULF

ใบรายงานผลการฝึกอบรมภายใน (Training Report)

หลักสูตร Course : ESMS-Sa-P-20_Ladder and Scafolding	วันที่ Date : 11 August 2023 เวลา Time : 09.00 ถึง to : 09.30
ส่วนงาน : All GBL	รวมระยะเวลา Period : ชั่วโมง : นาที Hrs.: Sec.
สถานที่ Place : MS Team	วิทยากร Trainer : Nopawee Wangjaichuen

ประเภทการอบรม : Training Type ☑ อบรมทั่วไป (General) ☐ อบรมหน้างาน (OJT)

การประเมินผล Evaluation Method ☑ การสอบถาม (Question) ☐ แบบทดสอบ (Test) ☐ ปฏิบัติจริง (Implement)

ที่ No.	ชื่อ - สกุล Name - Surename	งาน / ส่วนงาน Department / Division	ผลการประเมิน Result	ลายมือชื่อ Signature เช้า (Morning)	บ่าย (Afternoon)
1	Su [redacted]	MGR	3	[redacted]	
2	Ac [redacted] n	SHE	3		
3	Pa [redacted]	GA	2		
4	Ka [redacted]	GA	2		
5	Ja [redacted]	MTN	3		
◓	Cl [redacted]	MTN	3		
7	Sa [redacted]	MTN	3		
8	Su [redacted]	MTN	3		
9	Cl [redacted]	MTN	3		
10	Pc [redacted]	MTN	3		
11	Pe [redacted]	MTN	3		
12	Ta [redacted]	MTN	3		
13	Ba [redacted] a	OPT	3		
14	W [redacted]	OPT	3		
15	Su [redacted]	OPT	3		
16	To [redacted]	OPT	3		
17	Cl [redacted]	OPT	3		
18	Te [redacted]	OPT	3		
◓	Pa [redacted]	OPT	3		
20	Cl [redacted]	OPT	3		
21	Ar [redacted]	OPT	3		
22	Tu [redacted]	OPT	3		
23	Sa [redacted]	OPT	3		
24	C [redacted]	OPT	3		
25	Pa [redacted]	OPT	3		

หมายเหตุ : [redacted] นี้ที่ต่ำกว่าระดับ 2 ต้องทำการประเมินใหม่ภายในระยะเวลา 6 เดือน)

Remark : [redacted] der level 2 shall be re-evaluattion within 6 months)

Instructor Signed [redacted]

◔ ระดับ 1 (Level 1) หมายถึง (Means) สามารถปฏิบัติงานโดยมีผู้ควบคุม (Only working - helper)

◑ ระดับ 2 (Level 2) หมายถึง (Means) สามารถปฏิบัติงานได้ แต่ยังไม่สามารถตัดสินใจได้ (Can be working but can't solve the problem)

◕ ระดับ 3 (Level 3) หมายถึง (Means) สามารถปฏิบัติงาน แก้ไขปัญหาหรือตัดสินใจได้ (Can be working and solve the problem)

● ระดับ 4 (Level 4) หมายถึง (Means) มีความเข้าใจดีมาก ปฏิบัติงานได้ดี ตัดสินใจได้ และสอนผู้อื่นได้ (Excellance Working and to be trainer)

GULF

ใบรายงานผลการฝึกอบรมภายใน (Training Report)

หลักสูตร Course : ESMS-ES-P-07_Accident_Incident Investigation and Reporting ส่วนงาน : All GBL	วันที่ Date : 04 August 2023 เวลา Time : 09.00 ถึง to : 09.30 รวมระยะเวลา Period : ชั่วโมง : นาที Hrs.: Sec.
สถานที่ Place : MS Teams	วิทยากร Trainer : Kitima Boonpeng

ประเภทการอบรม : Training Type ☑ อบรมทั่วไป (General) ☐ อบรมหน้างาน (OJT)

การประเมินผล Evaluation Method ☑ การสอบถาม (Question) ☐ แบบทดสอบ (Test) ☐ ปฏิบัติจริง (Implement)

ที่ No.	ชื่อ - สกุล Name - Surename	งาน / ส่วนงาน Department / Division	ผลการประเมิน Result	ลายมือชื่อ Signature
1	[redacted]	MGR	3	[redacted]
2		SHE	3	
3		GA	3	
4		GA	3	
5		MTN	3	
6		MTN	3	
7		MTN	3	
8		MTN	3	
9		MTN	3	
10		MTN	3	
11		MTN	3	
12		MTN	3	
13		MTN	3	
14		MTN	3	
15		MTN	3	
16		OPT	3	
17		OPT	3	
18		OPT	3	
19		OPT	3	
20		OPT	3	
21		OPT	3	
22		OPT	3	
23		OPT	3	
24		OPT	3	
25		OPT	3	
26		OPT	3	
27		OPT	3	
28		OPT	3	
29		OPT	3	

หมายเห[redacted]ต่ำกว่าระดับ 2 ต้องทำการประเมินใหม่ภายในระยะเวลา 6 เดือน)

Remark : Passed = level 2 (In case of "under level 2 shall be re-evaluattion within 6 months)

Instructor Signed [redacted]

ระดับ 1 (Level 1)	หมายถึง (Means)	สามารถปฏิบัติงานโดยมีผู้ควบคุม (Only working - helper)
ระดับ 2 (Level 2)	หมายถึง (Means)	สามารถปฏิบัติงานได้ แต่ยังไม่สามารถตัดสินใจได้ (Can be working but can't solve the problem)
ระดับ 3 (Level 3)	หมายถึง (Means)	สามารถปฏิบัติงาน แก้ไขปัญหาหรือตัดสินใจได้ (Can be working and solve the problem)
ระดับ 4 (Level 4)	หมายถึง (Means)	มีความเข้าใจดีมาก ปฏิบัติงานได้ดี ตัดสินใจได้ และสอนผู้อื่นได้ (Excellance Working and to be trainer)

GULF

ใบรายงานผลการฝึกอบรมภายใน (Training Report)

หลักสูตร Course : ESMS-Sa-P-23_Portable Tools, Machine and Machinary Guarding	วันที่ Date : 02 July 2023 เวลา Time : 09.00 ถึง to : 09.30
ส่วนงาน : All GBL	รวมระยะเวลา Period : ชั่วโมง : นาที Hrs.: Sec.
สถานที่ Place : MS Teams	วิทยากร Trainer : Pongsatja Bumrungkitdee

ประเภทการอบรม : Training Type
- [x] อบรมทั่วไป (General)
- [ ] อบรมหน้างาน (OJT)

การประเมินผล Evaluation Method
- [x] การสอบถาม (Question)
- [ ] แบบทดสอบ (Test)
- [ ] ปฏิบัติจริง (Implement)

ที่ No.	ชื่อ - สกุล Name - Surename	งาน / ส่วนงาน Department / Division	ผลการประเมิน Resnlt	ลายมือชื่อ Signature
1		MGR	3	
2		SHE	3	
3		GA	1	
4		GA	1	
5		MTN	4	
6		MTN	4	
7		MTN	4	
8		MTN	4	
9		MTN	4	
10		MTN	4	
11		MTN	4	
12		MTN	4	
13		MTN	4	
14		MTN	3	
15		MTN	3	
16		OPT	3	
17		OPT	4	
18		OPT	4	
19		OPT	4	
20		OPT	4	
21		OPT	4	
22		OPT	4	
23		OPT	4	
24		OPT	4	
25		OPT	4	
26		OPT	4	
27		OPT	4	
28		OPT	4	
29		OPT	3	

หมายเหตุ : ผ่านเกณฑ์ = ระดับ 2 (ในกรณีที่ต่ำกว่าระดับ 2 ต้องทำการประเมินใหม่ภายในระยะเวลา 6 เดือน)

Remark : Passed = level 2 (In case of "under level 2 shall be re-evaluattion within 6 months)

Instructor Signed :

ระดับ 1 (Level 1)	หมายถึง (Means)	สามารถปฏิบัติงานโดยมีผู้ควบคุม (Only working - helper)
ระดับ 2 (Level 2)	หมายถึง (Means)	สามารถปฏิบัติงานได้ แต่ยังไม่สามารถตัดสินใจได้ (Can be working but can't solve the problem)
ระดับ 3 (Level 3)	หมายถึง (Means)	สามารถปฏิบัติงาน แก้ไขปัญหาหรือตัดสินใจได้ (Can be working and solve the problem)
ระดับ 4 (Level 4)	หมายถึง (Means)	มีความเข้าใจดีมาก ปฏิบัติงานได้ดี ตัดสินใจได้ และสอนผู้อื่นได้ (Excellance Working and to be trainer)

GULF

ใบรายงานผลการฝึกอบรมภายใน (Training Report)

หลักสูตร Course : ซ้อมแผนฉุกเฉินสารเคมีรั่วไหล	วันที่ Date : 09 August 2023 เวลา Time : 09.00 ถึง to : 17.00
ส่วนงาน : All GBL	รวมระยะเวลา Period : ชั่วโมง : นาที Hrs.: Sec.
สถานที่ Place : GBL Meeting Room	วิทยากร Trainer : Adisak Chertchuwongtanakorn

ประเภทการอบรม : Training Type
- [x] อบรมทั่วไป (General)
- [ ] อบรมหน้างาน (OJT)

การประเมินผล Evaluation Method
- [x] การสอบถาม (Question)
- [ ] แบบทดสอบ (Test)
- [ ] ปฏิบัติจริง (Implement)

ที่ No.	ชื่อ - สกุล Name - Surename	งาน / ส่วนงาน Department / Division	ผลการประเมิน Result	ลายมือชื่อ Signature เช้า (Morning)	บ่าย(Afternoon)
1		MTN	3		
2		MTN	3		
3		MTN	3		
4		MTN	3		
5		MTN	3		
6		MTN	3		
7		MTN	3		
8		OPT	3		
9		OPT	3		
10		OPT	3		
11		OPT	3		
12		OPT	3		
13		OPT	3		
14		OPT	3		
15		MTN	3		
16		MTN	3		
17		OPT	3		
18		OPT	3		
19					
20					
21					
22					
23					
24					
25					
26					
27					
28					
29					

หมายเหตุ : ผ่านเกณฑ์ = ระดับ 2 (ในกรณีที่ต่ำกว่าระดับ 2 ต้องทำการประเมินใหม่ภายในระยะเวลา 6 เดือน)

Remark : Passed = level 2 (In case of "under level 2 shall be re-evaluation within 6 months)

Instructor Signed :

- ระดับ 1 (Level 1) หมายถึง (Means) สามารถปฏิบัติงานโดยมีผู้ควบคุม (Only working - helper)
- ระดับ 2 (Level 2) หมายถึง (Means) สามารถปฏิบัติงานได้ แต่ยังไม่สามารถตัดสินใจได้ (Can be working but can't solve the problem)
- ระดับ 3 (Level 3) หมายถึง (Means) สามารถปฏิบัติงาน แก้ไขปัญหาหรือตัดสินใจได้ (Can be working and solve the problem)
- ระดับ 4 (Level 4) หมายถึง (Means) มีความเข้าใจดีมาก ปฏิบัติงานได้ดี ตัดสินใจได้ และสอนผู้อื่นได้ (Excellance Working and to be trainer)

GULF

ใบรายงานผลการฝึกอบรมภายใน (Training Report)

หลักสูตร Course : Systematic cause analysis techique (SCAT)

วันที่ Date : 04 August 2023 เวลา Time : 09.30 ถึง to : 10.00

ส่วนงาน : All GBL

รวมระยะเวลา Period : ชั่วโมง : นาที Hrs.: Sec.

สถานที่ Place : MS Teams

วิทยากร Trainer : Adisak Chertchuwongtanakorn

ประเภทการอบรม : Training Type ☑ อบรมทั่วไป (General) ☐ อบรมหน้างาน (OJT)

การประเมินผล Evaluation Method ☑ การสอบถาม (Question) ☐ แบบทดสอบ (Test) ☐ ปฏิบัติจริง (Implement)

ที่ No.	ชื่อ - สกุล Name - Surename	งาน / ส่วนงาน Department / Division	ผลการประเมิน Result	ลายมือชื่อ Signature
1	[redacted]	MGR	3	[redacted]
2		GA	2	
3		GA	2	
4		MTN	3	
5		MTN	3	
6		MTN	3	
7		MTN	3	
8		MTN	3	
9		MTN	3	
10		MTN	3	
11		MTN	3	
12		MTN	3	
13		MTN	3	
14		MTN	3	
15		OPT	3	
16		OPT	3	
17		OPT	3	
18		OPT	3	
19		OPT	3	
20		OPT	3	
21		OPT	3	
22		OPT	3	
23		OPT	3	
24		OPT	3	
25		OPT	3	
26		OPT	3	
27		OPT	3	
28		OPT	3	

หมายเหตุ : ผ่านเกณฑ์ = ระดับ 2 (ในกรณีที่ต่ำกว่าระดับ 2 ต้องทำการประเมินใหม่ภายในระยะเวลา 6 เดือน)

Remark : Passed = level 2 (In case of "under level 2 shall be re-evaluattion within 6 months)

Instructor Signe [redacted]

ระดับ 1 (Level 1)	หมายถึง (Means)	สามารถปฏิบัติงานโดยมีผู้ควบคุม (Only working - helper)
ระดับ 2 (Level 2)	หมายถึง (Means)	สามารถปฏิบัติงานได้ แต่ยังไม่สามารถตัดสินใจได้ (Can be working but can't solve the problem)
ระดับ 3 (Level 3)	หมายถึง (Means)	สามารถปฏิบัติงาน แก้ไขปัญหาหรือตัดสินใจได้ (Can be working and solve the problem)
ระดับ 4 (Level 4)	หมายถึง (Means)	มีความเข้าใจดีมาก ปฏิบัติงานได้ดี ตัดสินใจได้ และสอนผู้อื่นได้ (Excellance Working and to be trainer)

GULF

ใบรายงานผลการฝึกอบรมภายใน (Training Report)

หลักสูตร Course : ความปลอดภัยในการทำงานเกี่ยวกับไฟฟ้า	วันที่ Date : 09 June 2023 เวลา Time : 13.00 ถึง to : 16.00
ส่วนงาน : All GBL	รวมระยะเวลา Period : ชั่วโมง : นาที Hrs.: Sec.
สถานที่ Place : MS Teams	วิทยากร Trainer : Sarawut Kerdkla

ประเภทการอบรม : Training Type
- [x] อบรมทั่วไป (General)
- [ ] อบรมหน้างาน (OJT)

การประเมินผล Evaluation Method
- [x] การสอบถาม (Question)
- [ ] แบบทดสอบ (Test)
- [ ] ปฏิบัติจริง (Implement)

ที่ No.	ชื่อ - สกุล Name - Surename	งาน / ส่วนงาน Department / Division	ผลการประเมิน Result	ลายมือชื่อ Signature เช้า (Morning)	บ่าย(Afternoon)
1	[redacted]	MGR	4	[redacted]	
2		SHE	4		
3		GA	3		
4		GA	3		
5		MTN	4		
6		MTN	3		
7		MTN	3		
8		MTN	3		
9		MTN	3		
10		MTN	3		
11		MTN	3		
12		MTN	3		
13		MTN	3		
14		OPT	4		
15		OPT	3		
16		OPT	3		
17		OPT	3		
18		OPT	3		
19		OPT	3		
20		OPT	3		
21		OPT	3		
22		OPT	3		
23		OPT	3		
24		OPT	3		
25		OPT	3		
26		OPT	3		
27		OPT	3		
28		OPT	3		

หมายเหตุ : ผ่านเกณฑ์ = ระดับ 2 (ในกรณีที่ต่ำกว่าระดับ 2 ต้องทำการประเมินใหม่ภายในระยะเวลา 6 เดือน)

Remark : Passed = level 2 (In case of "under level 2 shall be re-evaluattion within 6 months)

Instructor Signed : [redacted]

- ระดับ 1 (Level 1) หมายถึง (Means) สามารถปฏิบัติงานโดยมีผู้ควบคุม (Only working - helper)
- ระดับ 2 (Level 2) หมายถึง (Means) สามารถปฏิบัติงานได้ แต่ยังไม่สามารถตัดสินใจได้ (Can be working but can't solve the problem)
- ระดับ 3 (Level 3) หมายถึง (Means) สามารถปฏิบัติงาน แก้ไขปัญหาหรือตัดสินใจได้ (Can be working and solve the problem)
- ระดับ 4 (Level 4) หมายถึง (Means) มีความเข้าใจดีมาก ปฏิบัติงานได้ดี ตัดสินใจได้ และสอนผู้อื่นได้ (Excellance Working and to be trainer)

GULF

ใบรายงานผลการฝึกอบรมภายใน (Training Report)

หลักสูตร Course : อบรม ดับเพลิงเบื้องต้น และซ้อมแผนฉุกเฉินเพลิงไหม้, ก๊าซรั่ว

ส่วนงาน : All GBL

วันที่ Date : 08 August 2023 เวลา Time : 09.00 ถึง to : 17.00

รวมระยะเวลา Period : ชั่วโมง : นาที Hrs.: Sec.

สถานที่ Place : GBL Meeting Room

วิทยากร Trainer : Fire Service Protection / [illegible]

ประเภทการอบรม : Training Type
- [x] อบรมทั่วไป (General)
- [ ] อบรมหน้างาน (OJT)

การประเมินผล Evaluation Method
- [x] การสอบถาม (Question)
- [ ] แบบทดสอบ (Test)
- [x] ปฏิบัติจริง (Implement)

ที่ No.	ชื่อ - สกุล Name - Surename	งาน / ส่วนงาน Department / Division	ผลการประเมิน Result	ลายมือชื่อ Signature
1	[redacted]	MRG	3	[redacted]
2		MRG	3	
3		SHE	3	
4		OPT	3	
5		GA	3	
6		GA	2	
7		MTN	3	
8		MTN	3	
9		MTN	3	
10		MTN	3	
11		MTN	3	
12		MTN	3	
13		MTN	3	
14		MTN	3	
15		MTN	2	
16		MTN	2	
17		OPT	3	
18		OPT	3	
19		OPT	3	
20		OPT	3	
21		OPT	2	
22		MTN	3	
23				
24				
25				
26				
27				
28				
29				

หมายเหตุ : ผ่านเกณฑ์ = ระดับ 2 (ในกรณีที่ต่ำกว่าระดับ 2 ต้องทำการประเมินใหม่ภายในระยะเวลา 6 เดือน)

Remark : Passed = level 2 (In case of "under level 2 shall be re-evaluattion within 6 months)

Instructor Signed : [redacted]

- ระดับ 1 (Level 1) หมายถึง (Means) สามารถปฏิบัติงานโดยมีผู้ควบคุม (Only working - helper)
- ระดับ 2 (Level 2) หมายถึง (Means) สามารถปฏิบัติงานได้ แต่ยังไม่สามารถตัดสินใจได้ (Can be working but can't solve the problem)
- ระดับ 3 (Level 3) หมายถึง (Means) สามารถปฏิบัติงาน แก้ไขปัญหาหรือตัดสินใจได้ (Can be working and solve the problem)
- ระดับ 4 (Level 4) หมายถึง (Means) มีความเข้าใจดีมาก ปฏิบัติงานได้ดี ตัดสินใจได้ และสอนผู้อื่นได้ (Excellance Working and to be trainer)

GULF

ใบรายงานผลการฝึกอบรมภายใน (Training Report)

หลักสูตร Course : อบรม ดับเพลิงเบื้องต้น และซ้อมแผนฉุกเฉินเพลิงไหม้, ก๊าซรั่ว

วันที่ Date : 08 August 2023 เวลา Time : 09.00 ถึง to : 17.00

ส่วนงาน : All GBL

รวมระยะเวลา Period : ชั่วโมง : นาที Hrs.: Sec.

สถานที่ Place : GBL Meeting Room

วิทยากร Trainer :

ประเภทการอบรม : Training Type
- [x] อบรมทั่วไป (General)
- [ ] อบรมหน้างาน (OJT)

การประเมินผล Evaluation Method
- [x] การสอบถาม (Question)
- [ ] แบบทดสอบ (Test)
- [ ] ปฏิบัติจริง (Implement)

ที่ No.	ชื่อ - สกุล Name - Surename	งาน / ส่วนงาน Department / Division	ผลการประเมิน Result	ลายมือชื่อ Signature
1	[redacted]	ผู้ช่วยช่าง	2	[redacted]
2		ผู้ช่วยช่าง	2	
3		ผู้ช่วยช่าง	2	
4		ผู้ช่วยช่าง	2	
5		แม่บ้าน	2	
6		แม่บ้าน	2	
7		แม่บ้าน	2	
8		จปส.	2	
9		อปส.	2	
10		ช.ผ.ก.	2	
11		รปอ	2	
12		คนสวน	2	
13		คนสวน	2	
14		คนสวน	2	
15				
16				
17				
18				
19				
20				
21				
22				
23				
24				
25				
26				
27				
28				
29				

หมายเหตุ : ผ่านเกณฑ์ = ระดับ 2 (ในกรณีที่ต่ำกว่าระดับ 2 ต้องทำการประเมินใหม่ภายในระยะเวลา 6 เดือน)

Remark : Passed = level 2 (In case of "under level 2 shall be re-evaluattion within 6 months)

Instructor Signed : [redacted]

- ระดับ 1 (Level 1) หมายถึง (Means) สามารถปฏิบัติงานโดยมีผู้ควบคุม (Only working - helper)
- ระดับ 2 (Level 2) หมายถึง (Means) สามารถปฏิบัติงานได้ แต่ยังไม่สามารถตัดสินใจได้ (Can be working but can't solve the problem)
- ระดับ 3 (Level 3) หมายถึง (Means) สามารถปฏิบัติงาน แก้ไขปัญหาหรือตัดสินใจได้ (Can be working and solve the problem)
- ระดับ 4 (Level 4) หมายถึง (Means) มีความเข้าใจดีมาก ปฏิบัติงานได้ดี ตัดสินใจได้ และสอนผู้อื่นได้ (Excellance Working and to be trainer)

GULF

ใบรายงานผลการฝึกอบรมภายใน (Training Report)

หลักสูตร Course : แผนฉุกเฉินการก่อวินาศกรรม, แผนฉุกเฉินภัยพิบัติตามธรรมชาติ , แผนฉุกเฉินกรณีพนักงานหรือบุคคลได้รับอุบัติเหตุบาดเจ็บรุนแรง หรือเสียชีวิตจากการทำงาน, แผนฉุกเฉินโรคระบาด, แผนฉุกเฉินรังสีรั่วไหล

ส่วนงาน : All GBL

วันที่ Date : 09 August 2023 เวลา Time : 09.00 ถึง to : 17.00

รวมระยะเวลา Period : ชั่วโมง : นาที Hrs.: Sec.

สถานที่ Place : GBL Meeting Room

วิทยากร Trainer : Adisak Chertchuwongtanakorn

ประเภทการอบรม : Training Type
- [x] อบรมทั่วไป (General)
- [ ] อบรมหน้างาน (OJT)

การประเมินผล Evaluation Method
- [x] การสอบถาม (Question)
- [ ] แบบทดสอบ (Test)
- [ ] ปฏิบัติจริง (Implement)

ที่ No.	ชื่อ - สกุล Name - Surename	งาน / ส่วนงาน Department / Division	ผลการประเมิน Result	ลายมือชื่อ Signature เช้า (Morning)	บ่าย(Afternoon)
1	[redacted]	GA	3	[redacted]	
2		GA	3		
3		MTN	3		
4		MTN	3		
5		MTN	3		
6		MTN	3		
7		MTN	3		
8		MTN	3		
9		MTN	3		
10		OPT	3		
11		OPT	3		
12		OPT	3		
13		OPT	3		
14		MTN	3		
15		MTN	3		
16					
17					
18					
19					
20					
21					
22					
23					
24					
25					
26					
27					
28					
29					

หมายเหตุ : ผ่านเกณฑ์ = ระดับ 2 (ในกรณีที่ต่ำกว่าระดับ 2 ต้องทำการประเมินใหม่ภายในระยะเวลา 6 เดือน)

Remark : Passed = level 2 (In case of "under level 2 shall be re-evaluattion within 6 months)

Instructor Signed :

- ระดับ 1 (Level 1) หมายถึง (Means) สามารถปฏิบัติงานโดยมีผู้ควบคุม (Only working - helper)
- ระดับ 2 (Level 2) หมายถึง (Means) สามารถปฏิบัติงานได้ แต่ยังไม่สามารถตัดสินใจได้ (Can be working but can't solve the problem)
- ระดับ 3 (Level 3) หมายถึง (Means) สามารถปฏิบัติงาน แก้ไขปัญหาหรือตัดสินใจได้ (Can be working and solve the problem)
- ระดับ 4 (Level 4) หมายถึง (Means) มีความเข้าใจดีมาก ปฏิบัติงานได้ดี ตัดสินใจได้ และสอนผู้อื่นได้ (Excellance Working and to be trainer)

GULF

ใบรายงานผลการฝึกอบรมภายใน (Training Report)

หลักสูตร Course : Internal Auditor อนุรักษ์พลังงาน	วันที่ Date : 10 August 2023 เวลา Time : 09.00 ถึง to : 17.00
ส่วนงาน : All GBL	รวมระยะเวลา Period : ชั่วโมง : นาที Hrs.: Sec.
สถานที่ Place : GBP Meeting Room	วิทยากร Trainer : IRQc and Oothai.

ประเภทการอบรม : Training Type
- [x] อบรมทั่วไป (General)
- [ ] อบรมหน้างาน (OJT)

การประเมินผล Evaluation Method
- [x] การสอบถาม (Question)
- [ ] แบบทดสอบ (Test)
- [ ] ปฏิบัติจริง (Implement)

ที่ No.	ชื่อ - สกุล Name - Surename	งาน / ส่วนงาน Department / Division	ผลการประเมิน Result	ลายมือชื่อ Signature เช้า (Morning)	ลายมือชื่อ Signature บ่าย(Afternoon)
1	[redacted]	MRG	3	[redacted]	
2		SHE	3		
3		OPT	3		
4		GA	3		
5		GA	3		
6		MTN	3		
7		MTN	3		
8		MTN	3		
9		MTN	3		
10		OPT	3		
11		OPT	3		
12		OPT	3		
13		MTN	3		
14		MTN	3		
15		MTN	3		
16		MTN	3		
17					
18					
19					
20					
21					
22					
23					
24					
25					
26					
27					
28					
29					

หมายเหตุ : ผ่านเกณฑ์ = ระดับ 2 (ในกรณีที่ต่ำกว่าระดับ 2 ต้องทำการประเมินใหม่ภายในระยะเวลา 6 เดือน)

Remark : Passed = level 2 (In case of "under level 2 shall be re-evaluation within 6 months)

Instructor Signed : [redacted]

- ระดับ 1 (Level 1) หมายถึง (Means) สามารถปฏิบัติงานโดยมีผู้ควบคุม (Only working - helper)
- ระดับ 2 (Level 2) หมายถึง (Means) สามารถปฏิบัติงานได้ แต่ยังไม่สามารถตัดสินใจได้ (Can be working but can't solve the problem)
- ระดับ 3 (Level 3) หมายถึง (Means) สามารถปฏิบัติงาน แก้ไขปัญหาหรือตัดสินใจได้ (Can be working and solve the problem)
- ระดับ 4 (Level 4) หมายถึง (Means) มีความเข้าใจดีมาก ปฏิบัติงานได้ดี ตัดสินใจได้ และสอนผู้อื่นได้ (Excellance Working and to be trainer)

GULF

ใบรายงานผลการฝึกอบรมภายใน (Training Report)

หลักสูตร Course : อบรม First aids & CPR	วันที่ Date : 07 August 2023 เวลา Time : 09.00 ถึง to : 16.00
ส่วนงาน : All GBL	รวมระยะเวลา Period : ชั่วโมง : นาที Hrs.: Sec.
สถานที่ Place : GBP Meeting Room	วิทยากร Trainer : Bangkok First Aid , [illegible]

ประเภทการอบรม : Training Type ☑ อบรมทั่วไป (General) ☐ อบรมหน้างาน (OJT)

การประเมินผล Evaluation Method ☑ การสอบถาม (Question) ☐ แบบทดสอบ (Test) ☑ ปฏิบัติจริง (Implement)

ที่ No.	ชื่อ - สกุล Name - Surename	งาน / ส่วนงาน Department / Division	ผลการประเมิน Result	ลายมือชื่อ Signature
1	[redacted]	MRG	3	[redacted]
2	[redacted]	SHE	3	[redacted]
3	[redacted]	OPT	3	[redacted]
4	[redacted]	GA	3	[redacted]
5	[redacted]	GA	3	[redacted]
6	[redacted]	MTN	3	[redacted]
7	[redacted]	MTN	3	[redacted]
8	[redacted]	MTN	3	[redacted]
9	[redacted]	MTN	3	[redacted]
10	[redacted]	MTN	3	[redacted]
11	[redacted]	MTN	3	[redacted]
12	[redacted]	MTN	3	[redacted]
13	[redacted]	MTN	3	[redacted]
14	[redacted]	MTN	3	[redacted]
15	[redacted]	OPT	3	[redacted]
16	[redacted]	OPT	3	[redacted]
17	[redacted]	OPT	3	[redacted]
18	[redacted]	Helper	3	[redacted]
19	[redacted]	Helper	3	[redacted]
20	[redacted]	Helper	3	[redacted]
21	[redacted]	~~Helper~~		[redacted]
22	[redacted]	Helper	3	[redacted]
23	[redacted]	WH	3	[redacted]
24				[redacted]
25				[redacted]
26				[redacted]
27				[redacted]
28				[redacted]
29				[redacted]

หมายเหตุ : ผ่านเกณฑ์ = ระดับ 2 (ในกรณีที่ต่ำกว่าระดับ 2 ต้องทำการประเมินใหม่ภายในระยะเวลา 6 เดือน)

Remark : Passed = level 2 (In case of "under level 2 shall be re-evaluattion within 6 months)

Instructor Signed : [redacted]

- ระดับ 1 (Level 1) หมายถึง (Means) สามารถปฏิบัติงานโดยมีผู้ควบคุม (Only working - helper)
- ระดับ 2 (Level 2) หมายถึง (Means) สามารถปฏิบัติงานได้ แต่ยังไม่สามารถตัดสินใจได้ (Can be working but can't solve the problem)
- ระดับ 3 (Level 3) หมายถึง (Means) สามารถปฏิบัติงาน แก้ไขปัญหาหรือตัดสินใจได้ (Can be working and solve the problem)
- ระดับ 4 (Level 4) หมายถึง (Means) มีความเข้าใจดีมาก ปฏิบัติงานได้ดี ตัดสินใจได้ และสอนผู้อื่นได้ (Excellance Working and to be trainer)

GULF

ใบรายงานผลการฝึกอบรมภายใน (Training Report)

หลักสูตร Course : โรคจากการประอาชีพและโรคจากสิ่งแวดล้อม

วันที่ Date : 19 July 2023 เวลา Time : 13.00 ถึง to : 14.00

ส่วนงาน : All GBL

รวมระยะเวลา Period : ชั่วโมง : นาที Hrs.: Sec.

สถานที่ Place : MS Teams

วิทยากร Trainer : Kitima Boonpeng

ประเภทการอบรม : Training Type
- [x] อบรมทั่วไป (General)
- [ ] อบรมหน้างาน (OJT)

การประเมินผล Evaluation Method
- [x] การสอบถาม (Question)
- [ ] แบบทดสอบ (Test)
- [ ] ปฏิบัติจริง (Implement)

ที่ No.	ชื่อ - สกุล Name - Surname	งาน / ส่วนงาน Department / Division	ผลการประเมิน Result	ลายมือชื่อ Signature เช้า (Morning)	บ่าย(Afternoon)
1	[redacted]	SHE	3	[redacted]	
2		GA	3		
3		GA	3		
4		MTN	3		
[illegible]		MTN	3		
6		MTN	3		
7		MTN	3		
8		MTN	3		
9		MTN	3		
10		MTN	3		
11		MTN	4		
12		MTN	3		
13		OPT	3		
14		OPT	3		
15		OPT	3		
16		OPT	3		
17		OPT	3		
[illegible]		OPT	3		
19		OPT	3		
20		OPT	3		

หมายเหตุ : ผ่านเกณฑ์ = ระดับ 2 (ในกรณีที่ต่ำกว่าระดับ 2 ต้องทำการประเมินใหม่ภายในระยะเวลา 6 เดือน)

Remark : Passed = level 2 (In case of "under level 2 shall be re-evaluattion within 6 months)

Instructor Signed : [redacted]

- ระดับ 1 (Level 1) หมายถึง (Means) สามารถปฏิบัติงานโดยมีผู้ควบคุม (Only working - helper)
- ระดับ 2 (Level 2) หมายถึง (Means) สามารถปฏิบัติงานได้ แต่ยังไม่สามารถตัดสินใจได้ (Can be working but can't solve the problem)
- ระดับ 3 (Level 3) หมายถึง (Means) สามารถปฏิบัติงาน แก้ไขปัญหาหรือตัดสินใจได้ (Can be working and solve the problem)
- ระดับ 4 (Level 4) หมายถึง (Means) มีความเข้าใจดีมาก ปฏิบัติงานได้ดี ตัดสินใจได้ และสอนผู้อื่นได้ (Excellance Working and to be trainer)

GULF

ใบรายงานผลการฝึกอบรมภายใน (Training Report)

หลักสูตร Course : ESMS-Sa-P-06 Powered Industrial Trucks truck	วันที่ Date : 06 October 2023 เวลา Time : 09.30 ถึง to :- 10.00
ส่วนงาน : All GBL	รวมระยะเวลา Period : ชั่วโมง : นาที Hrs.: Sec.
สถานที่ Place : MS Team	วิทยากร Trainer : Suphavit Phukamjad

ประเภทการอบรม : Training Type
- [x] อบรมทั่วไป (General)
- [ ] อบรมหน้างาน (OJT)

การประเมินผล Evaluation Method
- [x] การสอบถาม (Question)
- [ ] แบบทดสอบ (Test)
- [ ] ปฏิบัติจริง (Implement)

ที่ No.	ชื่อ - สกุล Name - Surename	งาน / ส่วนงาน Department / Division	ผลการประเมิน Result	ลายมือชื่อ Signature เช้า (Morning)	บ่าย(Afternoon)
1	[redacted]	GA	3	[redacted]	
2		MTN	4		
3		MTN	4		
4		OPT	4		
5		OPT	4		
6		OPT	4		
7		OPT	4		
8		OPT	4		

หมายเหตุ : ผ่านเกณฑ์ = ระดับ 2 (ในกรณีที่ต่ำกว่าระดับ 2 ต้องทำการประเมินใหม่ภายในระยะเวลา 6 เดือน)

Remark : Passed = level 2 (In case of "under level 2 shall be re-evaluattion within 6 months)

Instructor Signed : [redacted]

- ระดับ 1 (Level 1) หมายถึง (Means) สามารถปฏิบัติงานโดยมีผู้ควบคุม (Only working - helper)
- ระดับ 2 (Level 2) หมายถึง (Means) สามารถปฏิบัติงานได้ แต่ยังไม่สามารถตัดสินใจได้ (Can be working but can't solve the problem)
- ระดับ 3 (Level 3) หมายถึง (Means) สามารถปฏิบัติงาน แก้ไขปัญหาหรือตัดสินใจได้ (Can be working and solve the problem)
- ระดับ 4 (Level 4) หมายถึง (Means) มีความเข้าใจดีมาก ปฏิบัติงานได้ดี ตัดสินใจได้ และสอนผู้อื่นได้ (Excellance Working and to be trainer)

FP-HRA-02-07 Rev.00

GULF

ใบรายงานผลการฝึกอบรมภายใน (Training Report)

หลักสูตร Course : ESMS-Sa-P-25_Safety Sign and Colour Coding	วันที่ Date : 29 September 2023 เวลา Time : 09.30 ถึง to : 10.00
ส่วนงาน : All GBL	รวมระยะเวลา Period : ชั่วโมง : นาที Hrs.: Sec.
สถานที่ Place : MS Team	วิทยากร Trainer : Kitima Boonpeng

ประเภทการอบรม : Training Type
- [x] อบรมทั่วไป (General)
- [ ] อบรมหน้างาน (OJT)

การประเมินผล Evaluation Method
- [x] การสอบถาม (Question)
- [ ] แบบทดสอบ (Test)
- [ ] ปฏิบัติจริง (Implement)

ที่ No.	ชื่อ - สกุล Name - Surename	งาน / ส่วนงาน Department / Division	ผลการประเมิน Result	ลายมือชื่อ Signature เช้า (Morning)	บ่าย(Afternoon)
1		MGR	3		
2		SHE	3		
3		GA	3		
4		GA	3		
5		MTN	3		
6		MTN	3		
7		MTN	3		
8		MTN	3		
9		MTN	3		
10		MTN	3		
11		MTN	3		
12		MTN	3		
13		MTN	3		
14		OPT	3		
15		OPT	3		
16		OPT	3		
17		OPT	3		
18		OPT	3		
19		OPT	3		
20		OPT	3		
21		OPT	3		
22		OPT	3		
23		OPT	3		
24		OPT	3		
25		OPT	3		

หมายเหตุ : ผ่านเกณฑ์ = ระดับ 2 (ในกรณีที่ต่ำกว่าระดับ 2 ต้องทำการประเมินใหม่ภายในระยะเวลา 6 เดือน)

Remark : Passed = level 2 (In case of "under level 2 shall be re-evaluattion within 6 months)

Instructor Signed :

- ระดับ 1 (Level 1) หมายถึง (Means) สามารถปฏิบัติงานโดยมีผู้ควบคุม (Only working - helper)
- ระดับ 2 (Level 2) หมายถึง (Means) สามารถปฏิบัติงานได้ แต่ยังไม่สามารถตัดสินใจได้ (Can be working but can't solve the problem)
- ระดับ 3 (Level 3) หมายถึง (Means) สามารถปฏิบัติงาน แก้ไขปัญหาหรือตัดสินใจได้ (Can be working and solve the problem)
- ระดับ 4 (Level 4) หมายถึง (Means) มีความเข้าใจดีมาก ปฏิบัติงานได้ดี ตัดสินใจได้ และสอนผู้อื่นได้ (Excellance Working and to be trainer)

GULF

ใบรายงานผลการฝึกอบรมภายใน (Training Report)

หลักสูตร Course : PD-HRA-02 การฝึกอบรม	วันที่ Date : 20 September 2023 เวลา Time : 11.30 ถึง to : 12.00
ส่วนงาน : All GBL	รวมระยะเวลา Period : ชั่วโมง : นาที Hrs.: Sec.
สถานที่ Place : MS Team	วิทยากร Trainer : Kamonrat Sucharitchan

ประเภทการอบรม : Training Type
- [x] อบรมทั่วไป (General)
- [ ] อบรมหน้างาน (OJT)

การประเมินผล Evaluation Method
- [x] การสอบถาม (Question)
- [ ] แบบทดสอบ (Test)
- [ ] ปฏิบัติจริง (Implement)

ที่ No.	ชื่อ - สกุล Name - Surename	งาน / ส่วนงาน Department / Division	ผลการประเมิน Result	ลายมือชื่อ Signature เช้า (Morning)	บ่าย(Afternoon)
1	[redacted]	GA	4	[redacted]	
2		MTN	3		
3		MTN	3		
4		MTN	3		
5		MTN	3		
6		MTN	3		
7		MTN	3		
8		OPT	3		
9		OPT	3		
10		OPT	3		
11		OPT	3		
12		OPT	3		
13		OPT	3		
14		OPT	3		
15		OPT	3		
16		OPT	3		

หมายเหตุ : ผ่านเกณฑ์ = ระดับ 2 (ในกรณีที่ต่ำกว่าระดับ 2 ต้องทำการประเมินใหม่ภายในระยะเวลา 6 เดือน)

Remark : Passed = level 2 (In case of "under level 2 shall be re-evaluattion within 6 months)

Instructor Signe [redacted]

- ระดับ 1 (Level 1) หมายถึง (Means) สามารถปฏิบัติงานโดยมีผู้ควบคุม (Only working - helper)
- ระดับ 2 (Level 2) หมายถึง (Means) สามารถปฏิบัติงานได้ แต่ยังไม่สามารถตัดสินใจได้ (Can be working but can't solve the problem)
- ระดับ 3 (Level 3) หมายถึง (Means) สามารถปฏิบัติงาน แก้ไขปัญหาหรือตัดสินใจได้ (Can be working and solve the problem)
- ระดับ 4 (Level 4) หมายถึง (Means) มีความเข้าใจดีมาก ปฏิบัติงานได้ดี ตัดสินใจได้ และสอนผู้อื่นได้ (Excellance Working and to be trainer)

ภาคผนวก ข-13

เอกสารการออกแบบ Cooling Pond และ Emergency Pond

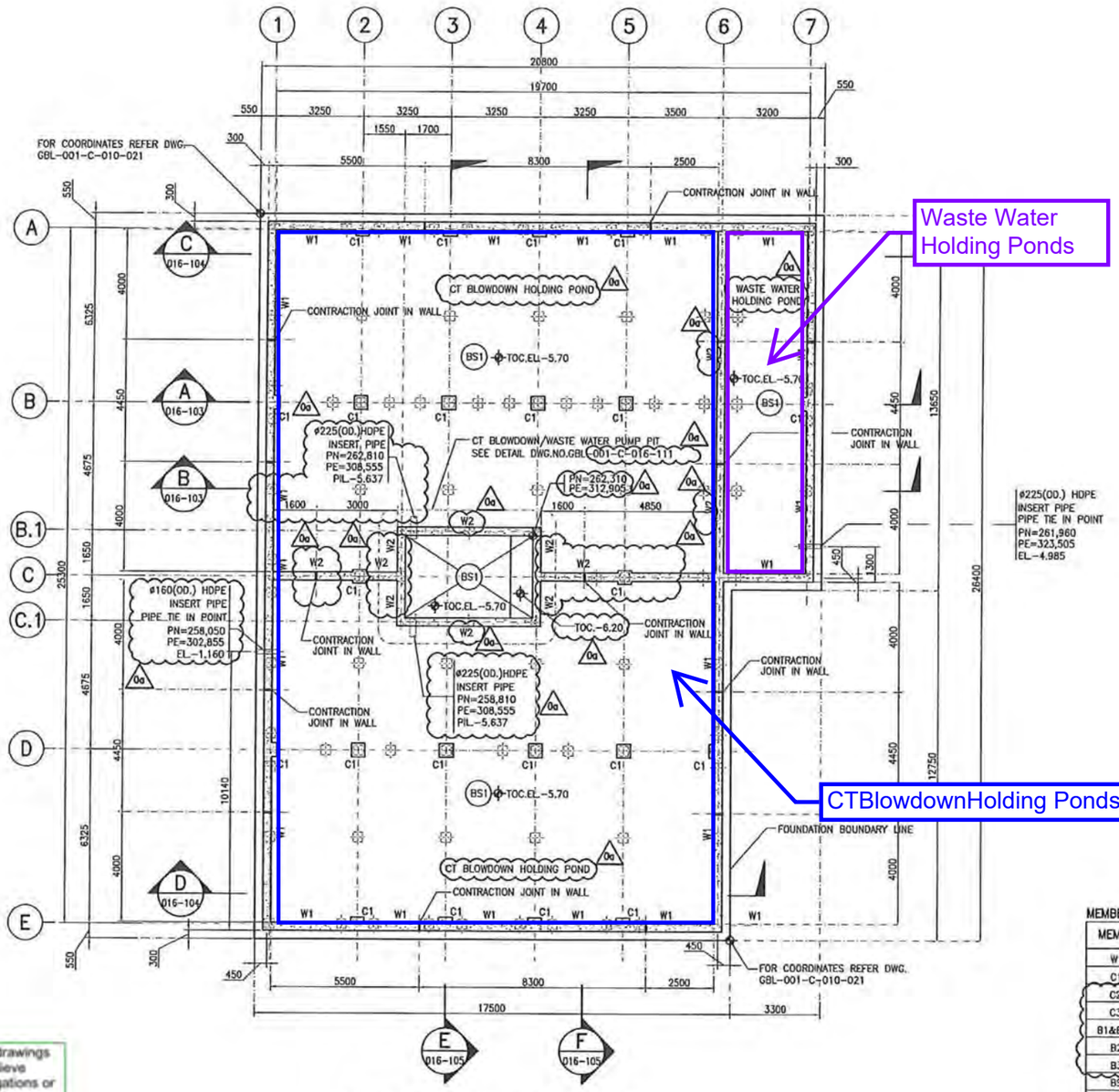

FOUNDATION PLAN AT EL.-5.70

SCALE 1:100

NOTES :

1. ALL DIMENSIONS AND COORDINATES ARE IN MILLIMETERS, ALL ELEVATIONS ARE IN METERS UNLESS OTHERWISE INDICATED.
2. THE SUBCONTRACTOR HAS TO CHECK ALL DIMENSIONS & ELEVATIONS. ANY DISCREPANCY, CONFLICTING OR ERRONEOUS INFORMATION SHALL BE REPORTED TO THE TOYO & CLARIFIED PRIOR TO COMMENCING WORK.
3. THIS DRAWING SHALL BE READ IN CONJUNCTION WITH RELEVANT DRAWINGS & SPECIFICATIONS.
4. PROJECT DATUM EL.±0.000 IS EQUAL TO +2.400 m. MSL.
5. CONTROL POINT IS PROJECT BENCH MARK NO. PBM-3 , LOCATED AT COORDINATES OF TRUE NORTH ; TN=1,576,136.080 M., TRUE EAST ; TE = 671,234.184 M., EL. = 2.170 MSL. ; REFER TO TOPOGRAPHIC MAP , PREPARED BY INFRATECH ASTM CO.,LTD.
6. SUBSOIL UNDERNEATH ALL PILE FOUNDATIONS SHALL BE INSPECTED BY THE CONTRACTOR PRIOR TO LAYING OF BLINDING LAYER. RELATIVE COMPACTION OF FILLING SUBSOIL MATERAIL UNDERNEATH ALL PILE FOUNDATIONS SHALL BE AT LEAST 80% STANDARD PROCTOR DENSITY.
7. STRUCTURAL REQUIREMENT
   - 7.1 MINIMUM CONCRETE COMPRESSIVE STRENGTH 28 DAYS (CYLINDER)
     - -FOR REINFORCED CONCRETE MEMBERS ABOVE EL.±0.00 — fc'=27.5 MPa
     - -FOR REINFORCED CONCRETE MEMBERS AT OR BELOW EL.±0.00 — fc'=31 MPa
     - -FOR ROAD, GUTTER & DUCTBANKS — fc'=31 MPa
     - -LEAN CONCRETE — fc'=13.7 MPa
   - 7.2 STEEL REINFORCEMENT
     - -MINIMUM SPECIFIED YIELD STRENGTH FOR DEFORMED — fy=400 MPa
     - -MINIMUM SPECIFIED YIELD STRENGTH FOR ROUND BAR — fy=240 MPa
   - 7.3. REQUIREMENTS FOR 31MPa REINFORCED CONCRETE MEMBER
     - -CEMENT SHALL CONFORM TO ASTM C150 TYPE V, OR ASTM C595 IP(HS), IS(HS), IT(HS)
     - -MAXIMUM WATER-CEMENT RATIO = 0.39
     - -MINIMUM COVER TO REINFORCEMENT: db<=16mm, COVER = 50mm; db>16mm, COVER = 60mm
8. CONCRETE FINISH
   - -TOP OF FOUNDATION ABOVE GROUND — U3 STEEL TROWELED FINISH
   - -TOP OF FOUNDATION BELOW GROUND — U2 WOOD FLOATED FINISH
   - -TOP OF PLINTHS TO BE GROUTED — ROUGH FINISH MORE THAN 6 MM. PROFILE
   - -TOP OF OTHER PLINTHS, GUTTER — U3 STEEL TROWELED FINISH
   - -GUTTER (BASE) — U2 WOOD FLOATED FINISH
   - -SIDES OF PLINTHS — F2 SMOOTH FINISH
   - -PORTION OF FOUNDATION ABOVE GROUND — F2 SMOOTH FINISH
   - -PORTION OF FOUNDATION BELOW GROUND — F1 ROUGH FINISH
   - -INSIDE WALL SURFACE — F2 SMOOTH FINISH
9. THE EARTHING SYSTEM UNDER CONCRETE FOUNDATIONS SHALL BE COORDINATED AND FINISHED BEFORE CONCRETE POURING.
10. WATERPROOF ADMIXTURE APPROVED BY TOYO SHALL BE ADDED TO THE CONCRETE MIX.

ABBREVIATIONS:

℄	CENTER LINE	TOF.	TOP OF FOUNDATION
MM.	MILLIMETER	TOP.	TOP OF PLATE
M.	METER	FSL.	FINISHED SURFACE LEVEL
PCO.	PILE CUT-OFF	TOC.	TOP OF CONCRETE
BOF.	BOTTOM OF FOUNDATION	PIL.	PIPE INVERT LEVEL
BOC.	BOTTOM OF CONCRETE	HP.	HIGHEST POINT

MEMBER SCHEDULE

MEMBER	SIZE (mm.)
W1	300 mm. THK. RC.WALL
C1	500x500 mm. (BxD) RC.COLUMN
C2	500x500 mm. (BxD) RC.COLUMN
C3	400x400 mm. (BxD) RC.COLUMN
B1&B1A	500x500 mm. (BxD) RC.BEAM
B2	400x500 mm. (BxD) RC.BEAM
B3	300x500 mm. (BxD) RC.BEAM
BS1	800 mm. THK. RC.SLAB
S1	300 mm. THK. RC.SLAB
S2	300 mm. THK. RC.SLAB
S3	300 mm. THK. RC.SLAB
C4	250x250 mm. THK. RC.COLUMN
C4A	210x210 mm. THK. RC.COLUMN
W2	300 mm. THK. RC.WALL

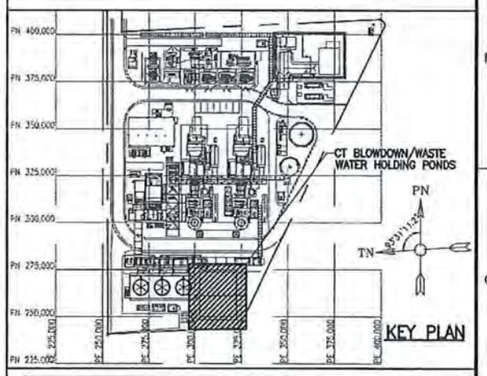

The approval or deemed approval of drawings and documents by Owner shall not relieve Contractor/Suppliers of any of its obligations or liabilities under the Construction/supply Contract

A – APPROVED

FINAL APPROVED FOR CONSTRUCTION

Rev. No.		Date	Description	Prepd.	Chkd.	Appd.	Authd.
0	0a	28/04/2017	FINAL APPROVED FOR CONSTRUCTION	WRP	ACB	MU	
A	A01	03/03/2017	FOR APPROVAL	WRP	ACB	MU	

Gulf MP

TOYO ENGINEERING

PÖYRY
Pöyry Energy Ltd.
1126/2 Vanit Building II
22nd Floor, Room No.2202-2301
New petchburi Road, Makkasan
Rajdthewi, Bangkok Thailand 10400

Project Title : Gulf MP

Document Title : STRUCTURAL CT BLOWDOWN/WASTE WATER HOLDING PONDS FOUNDATION PLAN AT EL. -5.70

Prepd.	SKS
Chkd.	ACB
Appd.	MU
Authd.	–
DATE	12/07/16

Document No.: GBL-001-C-016-101

Project No. : 9HX192092

Page No.: –

Rev. 0a

A1

Scale: 1:100

File Name: GBL-001-C-016-101_0a_A01

Copyright 2014 All right Reserved : Pöyry Energy Ltd.

M:\Thailand\9HX192092 Gulf MP Project\07 GBL\2 ENG MGMT\2.2 DRAFTING-WP\Civil\016 Utilities- Water & Sewer\CT BLOWDOWN_WASTE WATER HOLDING PONDS\FOR CONSTRUCTION\GBL-001-C-016-101_0a_A01.dwg

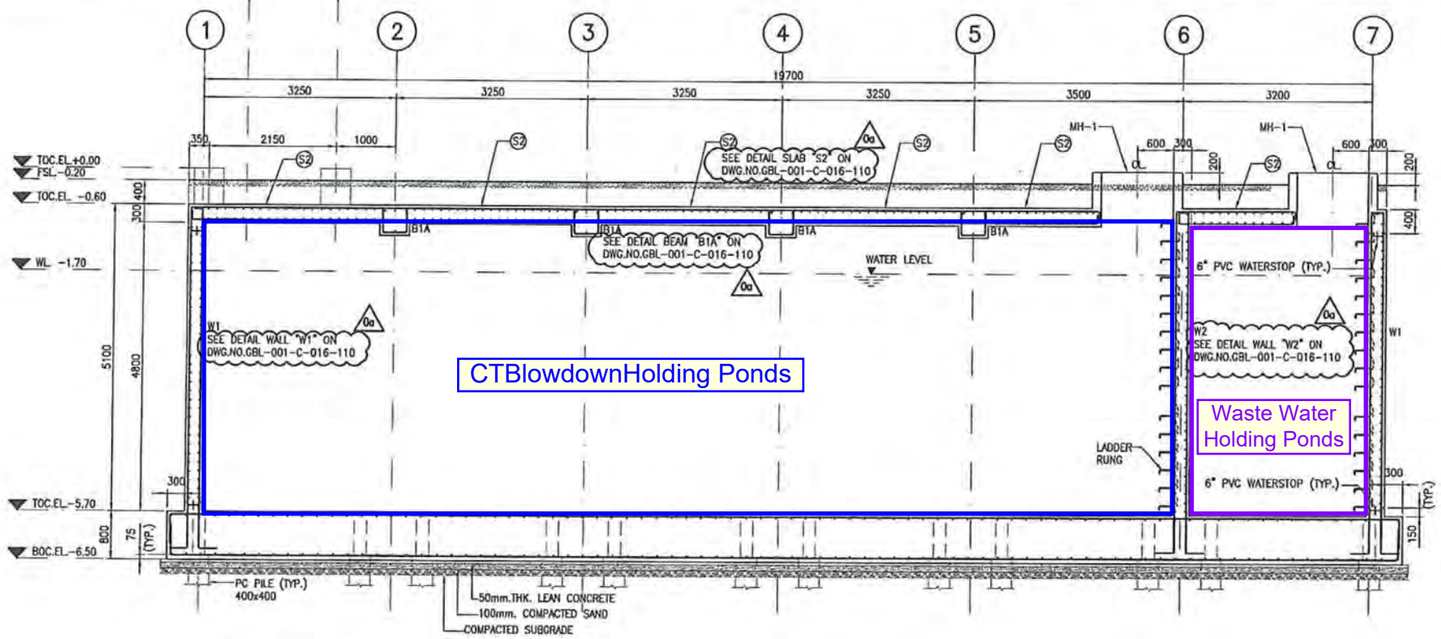

C 016-106 **SECTION**
SCALE 1:50

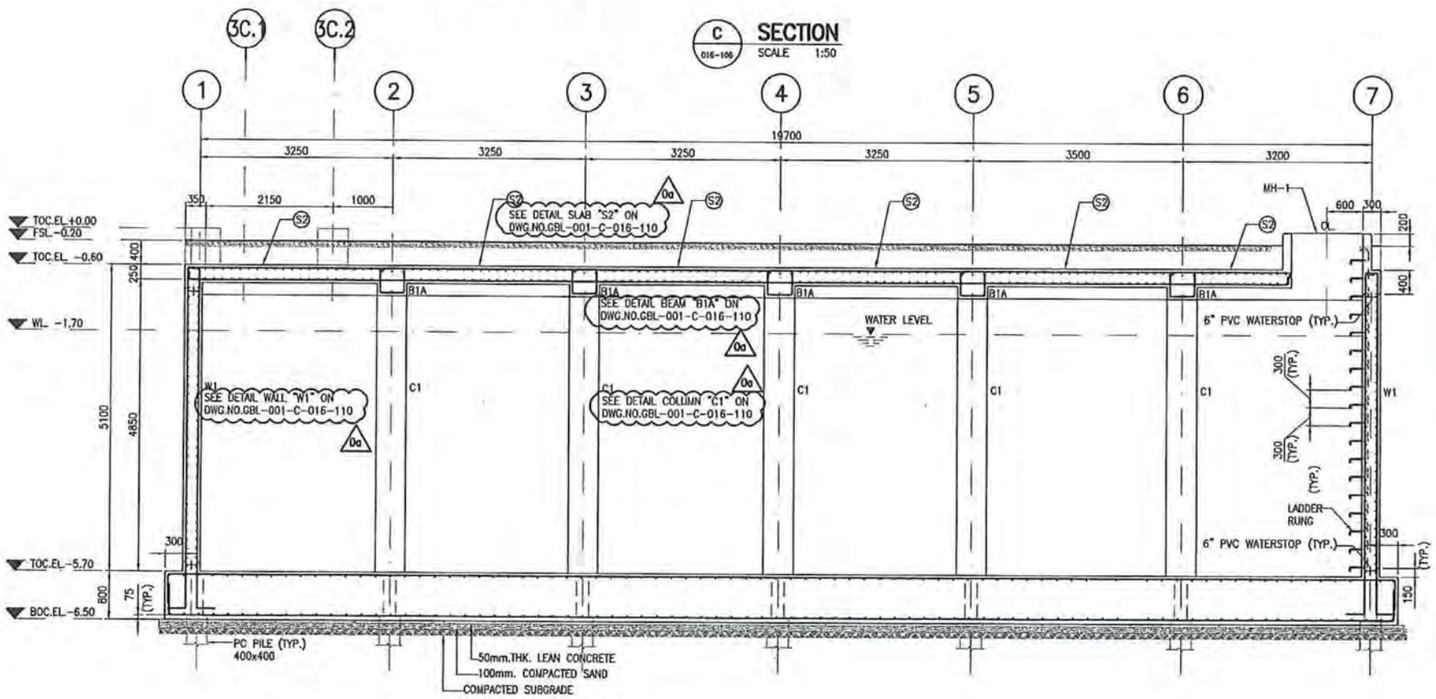

D 016-106 **SECTION**
SCALE 1:50

NOTES :

1. ALL DIMENSIONS AND COORDINATES ARE IN MILLIMETERS, ALL ELEVATIONS ARE IN METERS UNLESS OTHERWISE INDICATED.
2. THE SUBCONTRACTOR HAS TO CHECK ALL DIMENSIONS & ELEVATIONS. ANY DISCREPANCY, CONFLICTING OR ERRONEOUS INFORMATION SHALL BE REPORTED TO THE TOYO & CLARIFIED PRIOR TO COMMENCING WORK.
3. THIS DRAWING SHALL BE READ IN CONJUNCTION WITH RELEVANT DRAWINGS & SPECIFICATIONS.
4. PROJECT DATUM EL.±0.000 IS EQUAL TO +2.400 m. MSL.
5. CONTROL POINT IS PROJECT BENCH MARK NO. PBM-3 , LOCATED AT COORDINATES OF TRUE NORTH ; TN=1,576,136.080 M., TRUE EAST ; TE = 671,234.184 M., EL. = 2.170 MSL. ; REFER TO TOPOGRAPHIC MAP , PREPARED BY INFRATECH ASTM CO.,LTD.
6. SUBSOIL UNDERNEATH ALL PILE FOUNDATIONS SHALL BE INSPECTED BY THE CONTRACTOR PRIOR TO LAYING OF BLINDING LAYER. RELATIVE COMPACTION OF FILLING SUBSOIL MATERAIL UNDERNEATH ALL PILE FOUNDATIONS SHALL BE AT LEAST 80% STANDARD PROCTOR DENSITY.
7. STRUCTURAL REQUIREMENT
   - 7.1 MINIMUM CONCRETE COMPRESSIVE STRENGTH 28 DAYS (CYLINDER)
     - –FOR REINFORCED CONCRETE MEMBERS ABOVE EL.±0.00 — fc'=27.5 MPa
     - –FOR REINFORCED CONCRETE MEMBERS AT OR BELOW EL.±0.00 — fc'=31 MPa
     - –FOR ROAD, GUTTER & DUCTBANKS — fc'=31 MPa
     - –LEAN CONCRETE — fc'=13.7 MPa
   - 7.2 STEEL REINFORCEMENT
     - –MINIMUM SPECIFIED YIELD STRENGTH FOR DEFORMED — fy=400 MPa
     - –MINIMUM SPECIFIED YIELD STRENGTH FOR ROUND BAR — fy=240 MPa
   - 7.3. REQUIREMENTS FOR 31MPa REINFORCED CONCRETE MEMBER
     - –CEMENT SHALL CONFORM TO ASTM C150 TYPE V, OR ASTM C595 IP(HS), IS(HS), IT(HS)
     - –MAXIMUM WATER–CEMENT RATIO = 0.39
     - –MINIMUM COVER TO REINFORCEMENT: db<=16mm, COVER = 50mm db>16mm, COVER = 60mm
8. CONCRETE FINISH

–TOP OF FOUNDATION ABOVE GROUND	U3 STEEL TROWELED FINISH
–TOP OF FOUNDATION BELOW GROUND	U2 WOOD FLOATED FINISH
–TOP OF PLINTHS TO BE GROUTED	ROUGH FINISH MORE THAN 6 MM. PROFILE
–TOP OF OTHER PLINTHS, GUTTER	U3 STEEL TROWELED FINISH
–GUTTER (BASE)	U2 WOOD FLOATED FINISH
–SIDES OF PLINTHS	F2 SMOOTH FINISH
–PORTION OF FOUNDATION ABOVE GROUND	F2 SMOOTH FINISH
–PORTION OF FOUNDATION BELOW GROUND	F1 ROUGH FINISH
–INSIDE WALL SURFACE	F2 SMOOTH FINISH

9. THE EARTHING SYSTEM UNDER CONCRETE FOUNDATIONS SHALL BE COORDINATED AND FINISHED BEFORE CONCRETE POURING.
10. WATERPROOF ADMIXTURE APPROVED BY TOYO SHALL BE ADDED TO THE CONCRETE MIX.

ABBREVIATIONS:

℄	CENTER LINE	TOF.	TOP OF FOUNDATION
MM.	MILLIMETER	TOP.	TOP OF PLATE
M.	METER	FSL.	FINISHED SURFACE LEVEL
PCO.	PILE CUT–OFF	TOC.	TOP OF CONCRETE
BOF.	BOTTOM OF FOUNDATION	PIL.	PIPE INVERT LEVEL
BOC.	BOTTOM OF CONCRETE	HP.	HIGHEST POINT

The approval or deemed approval of drawings and documents by Owner shall not relieve Contractor/Suppliers of any of its obligations or liabilities under the Construction/supply Contract

A – APPROVED

MEMBER SCHEDULE

MEMBER	SIZE (mm.)
W1	300 mm. THK. RC.WALL
C1	500x500 mm. (BxD) RC.COLUMN
C2	500x500 mm. (BxD) RC.COLUMN
C3	400x400 mm. (BxD) RC.COLUMN
B1&B1A	500x500 mm. (BxD) RC.BEAM
B2	400x500 mm. (BxD) RC.BEAM
B3	300x500 mm. (BxD) RC.BEAM
BS1	800 mm. THK. RC.SLAB
S1	300 mm. THK. RC.SLAB
S2	300 mm. THK. RC.SLAB
S3	300 mm. THK. RC.SLAB
C4	250x250 mm. THK. RC.COLUMN
C4A	210x210 mm. THK. RC.COLUMN
W2	300 mm. THK. RC.WALL

FINAL APPROVED FOR CONSTRUCTION

Rev. No. (Gulf)	Rev. No. (Pöyry)	Date	Description	Prepd.	Chkd.	Appd.	Authd.
0	0a	28/04/2017	FINAL APPROVED FOR CONSTRUCTION	WRP	ACB	MU	
A	A01	03/03/2017	FOR APPROVAL	WRP	ACB	MU	

Gulf MP

TOYO ENGINEERING

PÖYRY
Pöyry Energy Ltd.
1126/2 Vanit Building II
22nd Floor, Room No.2202-2204
New petchburi Road, Makkasan
Rajchthewi, Bangkok Thailand 10400

Project Title : Gulf MP

Document Title : STRUCTURAL
CT BLOWDOWN/WASTE WATER HOLDING PONDS
REINFORCEMENT DETAILS

Prepd.	SKS
Chkd.	ACB
Appd.	MU
Authd.	–
DATE	12/07/16

Document No.: GBL–001–C–016–108

Project No. : SHX192092

Page No.: –
Rev. 0a
Scale: 1:100
A1
File Name: GBL-001-C-016-108_0a_A01

Copyright 2014 All right Reserved : Pöyry Energy Ltd.

M:\Thailand\9HX192092 Gulf MP Project\07 GBL\2 ENG MGMT\2.2 DRAFTING-WI\Civil\016 Utilities- Water & Sewer\CT BLOWDOWN_WASTE WATER HOLDING PONDS\FOR CONSTRUCTION\GBL-001-C-016-108_0a_A01.dwg

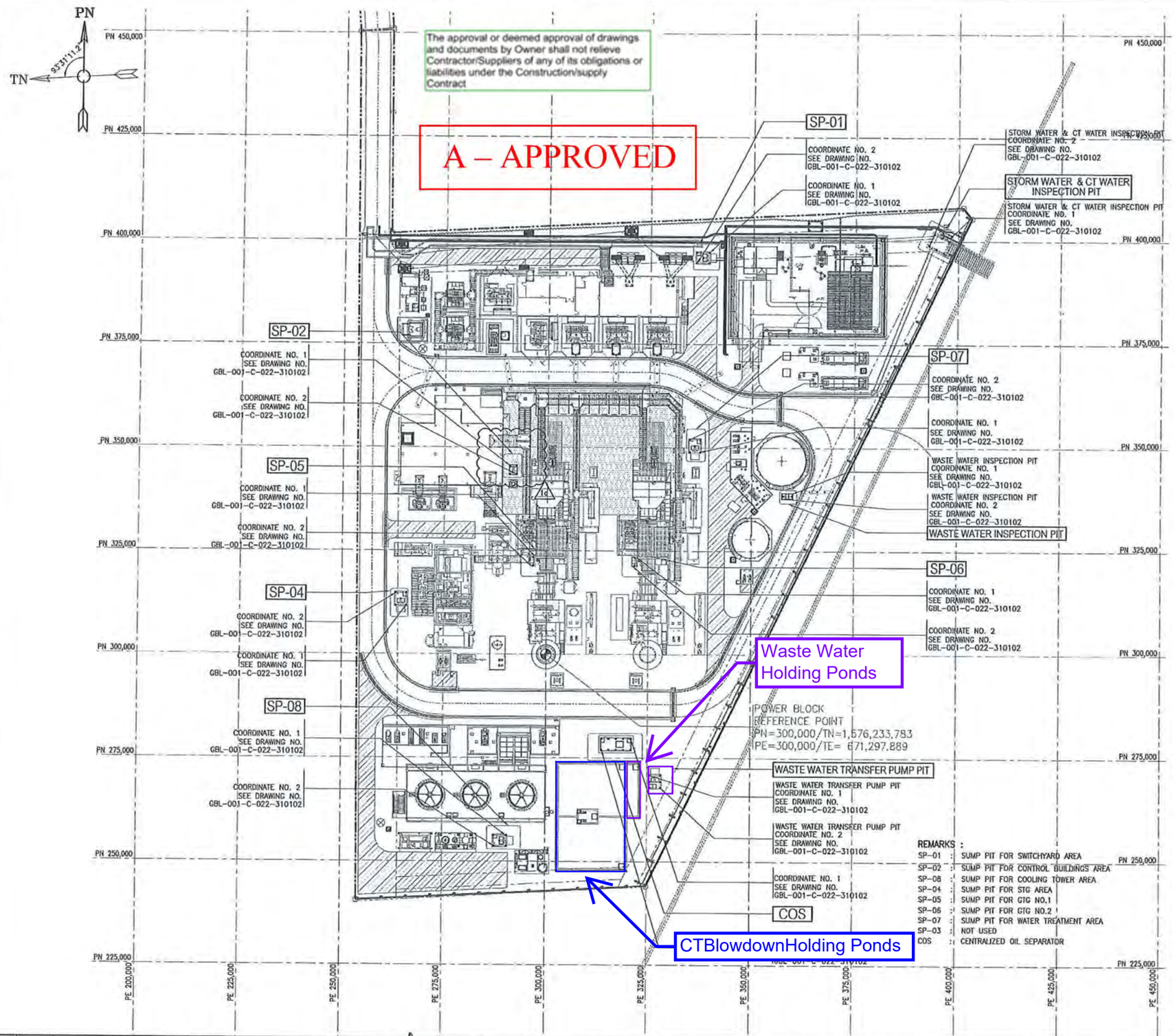

REMARKS :

SP-01	:	SUMP PIT FOR SWITCHYARD AREA
SP-02	:	SUMP PIT FOR CONTROL BUILDINGS AREA
SP-08	:	SUMP PIT FOR COOLING TOWER AREA
SP-04	:	SUMP PIT FOR STG AREA
SP-05	:	SUMP PIT FOR GTG NO.1
SP-06	:	SUMP PIT FOR GTG NO.2
SP-07	:	SUMP PIT FOR WATER TREATMENT AREA
SP-03	:	NOT USED
COS	:	CENTRALIZED OIL SEPARATOR

NOTES :

1. ALL DIMENSIONS AND COORDINATES ARE IN MILLIMETERS, ALL ELEVATIONS ARE IN METERS UNLESS OTHERWISE INDICATED.
2. THE SUBCONTRACTOR HAS TO CHECK ALL DIMENSIONS & ELEVATIONS. ANY DISCREPANCY, CONFLICTING OR ERRONEOUS INFORMATION SHALL BE REPORTED TO THE TOYO & CLARIFIED PRIOR TO COMMENCING WORK.
3. THIS DRAWING SHALL BE READ IN CONJUNCTION WITH RELEVANT DRAWINGS & SPECIFICATIONS.
4. PROJECT DATUM EL.±0.000 IS EQUAL TO +2.400 M. MSL.
5. CONTROL POINT IS PROJECT BENCH MARK NO. PBM-3 , LOCATED AT COORDINATES OF TRUE NORTH ; TN=1,576,136.080 M., TRUE EAST ; TE = 671,234.184 M., EL. = 2.170 M. MSL. ; REFER TO TOPOGRAPHIC MAP , PREPARED BY INFRATECH ASTM CO.,LTD.
6. FOR LOCATIONS, MATERIALS & SIZES OF INSERT PIPE REFER CORRESPONDING LAYOUT PLAN OF OILY & WASTE WATER SYSTEM DWG. NO. GBL-001-C-014-001 & LAYOUT PLAN OF WASTE AND UTILITY WATER SYSTEM DWG. NO. GBL-001-C-014-100
7. SUBSOIL UNDERNEATH ALL PILE FOUNDATIONS SHALL BE INSPECTED BY THE CONTRACTOR PRIOR TO LAYING OF BLINDING LAYER. RELATIVE COMPACTION OF FILLING SUBSOIL MATERAIL UNDERNEATH ALL PILE FOUNDATIONS SHALL BE AT LEAST 80% STANDARD PROCTOR DENSITY.
8. STRUCTURAL REQUIREMENT
   - 8.1 MINIMUM CONCRETE COMPRESSIVE STRENGTH 28 DAYS (CYLINDER)
     - -FOR REINFORCED CONCRETE MEMBERS ABOVE EL.±0.00 — fc'=27.5 MPa
     - -FOR REINFORCED CONCRETE MEMBERS AT OR BELOW EL.±0.00 — fc'=31 MPa
     - -FOR ROAD, GUTTER & DUCTBANKS — fc'=31 MPa
     - -LEAN CONCRETE — fc'=13.7 MPa
   - 8.2 STEEL REINFORCEMENT
     - -MINIMUM SPECIFIED YIELD STRENGTH FOR DEFORMED — fy=400 MPa
     - -MINIMUM SPECIFIED YIELD STRENGTH FOR ROUND BAR — fy=240 MPa
   - 8.3 REQUIREMENTS FOR 31 MPa REINFORCED CONCRETE MEMBERS
     - -CEMENT SHALL CONFORM TO ASTM C150 TYPE V OR ASTM C595 IP(HS), IS(HS), IT(HS).
     - -MAXIMUM WATER-CEMENT RATIO = 0.39
     - -MINIMUM COVER TO REINFORCEMENT :
       - db <= 16 MM., COVER 50 MM.
       - db > 16 MM., COVER 60 MM.
9. CONCRETE FINISH

-TOP OF FOUNDATION ABOVE GROUND	U3 STEEL TROWELED FINISH
-TOP OF FOUNDATION BELOW GROUND	U2 WOOD FLOATED FINISH
-TOP OF PLINTHS TO BE GROUTED	ROUGH FINISH MORE THAN 6 MM. PROFILE
-TOP OF OTHER PLINTHS, GUTTER	U3 STEEL TROWELED FINISH
-GUTTER (BASE)	U2 WOOD FLOATED FINISH
-SIDES OF PLINTHS	F2 SMOOTH FINISH
-PORTION OF FOUNDATION ABOVE GROUND	F2 SMOOTH FINISH
-PORTION OF FOUNDATION BELOW GROUND	F1 ROUGH FINISH
-INSIDE WALL SURFACE	F2 SMOOTH FINISH

10. WATERPROOF ADMIXTURE APPROVED BY TOYO SHALL BE ADDED TO THE CONCRETE MIX.
11. THE EARTHING SYSTEM UNDER CONCRETE FOUNDATIONS SHALL BE COORDINATED AND FINISHED BEFORE CONCRETE POURING.

ABBREVIATION :

℄	CENTER LINE	TOF.	TOP OF FOUNDATION
MM.	MILLIMETER	TOP.	TOP OF PLATE
M.	METER	FSL.	FINISHED GROUND LEVEL
PCO.	PILE CUT-OFF	TOC.	TOP OF CONCRETE

REFERENCE DRAWINGS:

1.	GBL-001-C-010-001	CIVIL GENERAL OVER ALL PLOT PLAN
2.	GBL-001-C-014-001	OILY & WASTE WATER SYSTEM LAYOUT PLAN
3.	GBL-001-C-014-100	WASTE & UTILITY WATER SYSTEM LAYOUT PLAN
4.	GBL-001-C-022-310101	STRUCTURE SUMP PIT LAYOUT PLAN
5.	GBL-001-C-022-310201	STRUCTURE SUMP PIT (SP-01) PLAN & SECTIONS
6.	GBL-001-C-022-310202	STRUCTURE SUMP PIT (SP-01) REINFORCEMENT DETAILS
7.	GBL-001-C-022-310203	STRUCTURE SUMP PIT (SP-04, 07 & 08) PLAN & SECTIONS
8.	GBL-001-C-022-310204	STRUCTURE SUMP PIT (SP-04, 07 & 08) REINFORCEMENT DETAILS
9.	GBL-001-C-022-310301	STRUCTURE SUMP PIT (SP-02) PLAN & SECTIONS
10.	GBL-001-C-022-310302	STRUCTURE SUMP PIT (SP-02) REINFORCEMENT DETAILS
11.	GBL-001-C-022-310401	STRUCTURE SUMP PIT (COS) PLAN & SECTIONS
12.	GBL-001-C-022-310402	STRUCTURE SUMP PIT (COS) REINFORCEMENT DETAILS
13.	GBL-001-C-022-310501	STRUCTURE SUMP PIT (SP-05 &SP-06)
14.	GBL-001-C-022-310601	WASTE WATER INSPECTION PIT
15.	GBL-001-C-022-310701	STORM WATER & CT WATER INSPECTION PIT
16.	GBL-001-C-022-310702	STORM WATER & CT WATER INSPECTION PIT REINFORCEMENT DETAILS
17.	GBL-001-C-022-310801	WASTE WATER TRANSFER PUMP PIT PLAN & SECTIONS
18.	GBL-001-C-022-310802	WASTE WATER TRANSFER PUMP PIT REINFORCEMENT DETAILS
19.	12SPP-001-C-022-311101	STRUCTURE TYPICAL SUMP PIT INSERT PIPE, PIPE SLEEVE & AIR VENT DETAILS
20.	12SPP-001-C-022-311102	STRUCTURE TYPICAL SUMP PIT MANHOLE COVER & LADDER RUNG DETAILS
21.	12SPP-001-C-022-311103	STRUCTURE TYPICAL INSPECTION PIT, COVER PLATE, INSERT SCREEN & LADDER RUNG.

FINAL APPROVED FOR CONSTRUCTION

Gulf	Poyry	Date	Description	Prepd.	Chkd.	Appd.	Authd.
1	1a	30/05/2017	FINAL APPROVED FOR CONSTRUCTION	WRP	ACB	MU	
0	0a	29/03/2017	FINAL APPROVED FOR CONSTRUCTION	WRP	ACB	MU	

Rev. No.

Gulf MP

TOYO ENGINEERING

PÖYRY
Pöyry Energy Ltd.
1126/2 Vanit Building II
22nd Floor, Room No 2202-2301
New petchburi Road, Makkasan
Rajchthewi, Bangkok Thailand 10400

Project Title : Gulf MP

Document Title : STRUCTURE SUMP PIT LAYOUT PLAN

Prepd.	AN
Chkd.	ACB
Appd.	MU
Authd.	–
DATE	–

Document No.: GBL-001-C-022-310101

Project No. : 9HX192092

Page No.: –
Rev. 1a 0a
A1
Scale: 1:500
File Name: GBL-001-C-022-310101_1a_0a.dwg

Copyright 2014 All right Reserved : Pöyry Energy Ltd.

M:\Thailand\9HX192092 Gulf MP Project\07 GBL\2 ENG MSMT\2.2 DRAFTING-WP\Structure\022 Foundations\022-310_SUMP PIT LAYOUT & SCHEDULE FOR CONSTRUCTION\GBL-001-C-022-310101_1a_0a.dwg

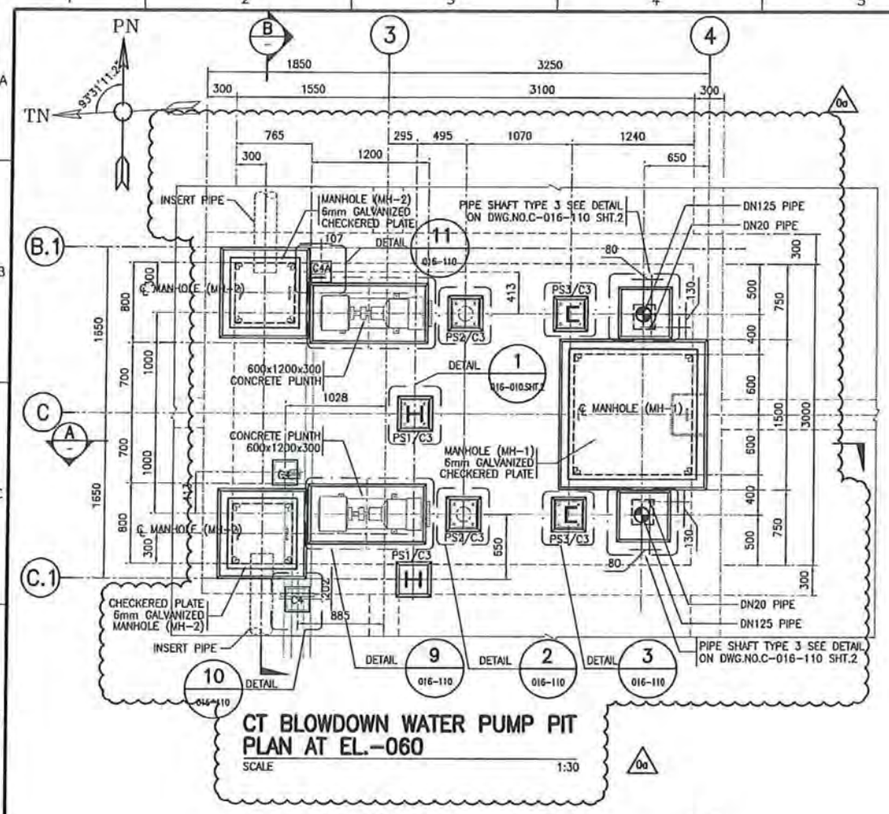

CT BLOWDOWN WATER PUMP PIT PLAN AT EL.-060

SCALE 1:30

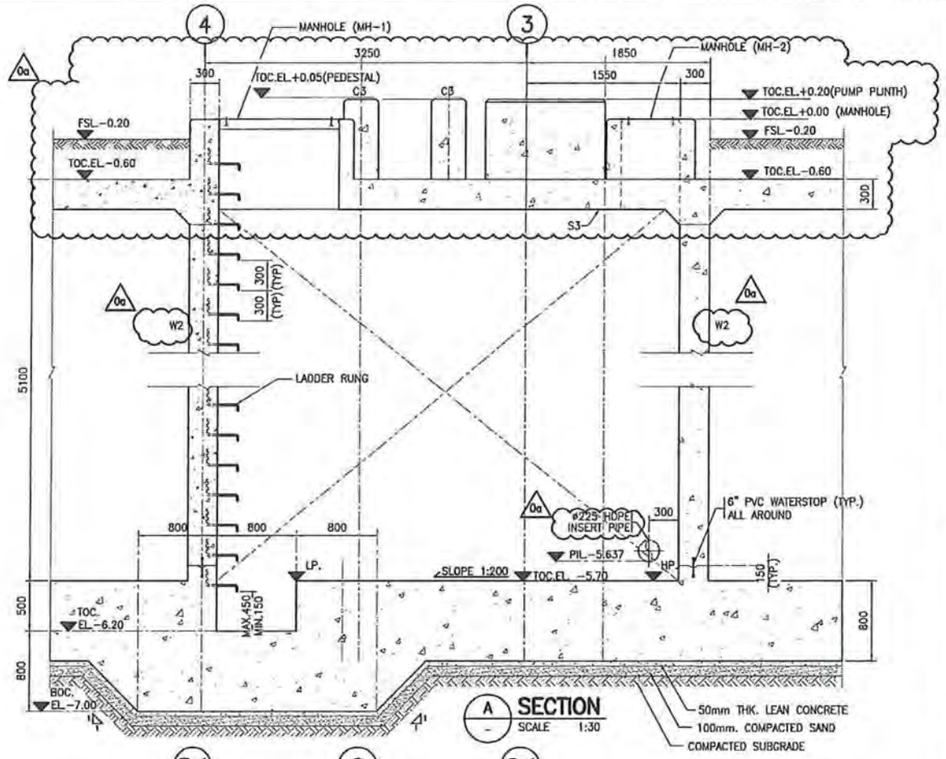

A SECTION

SCALE 1:30

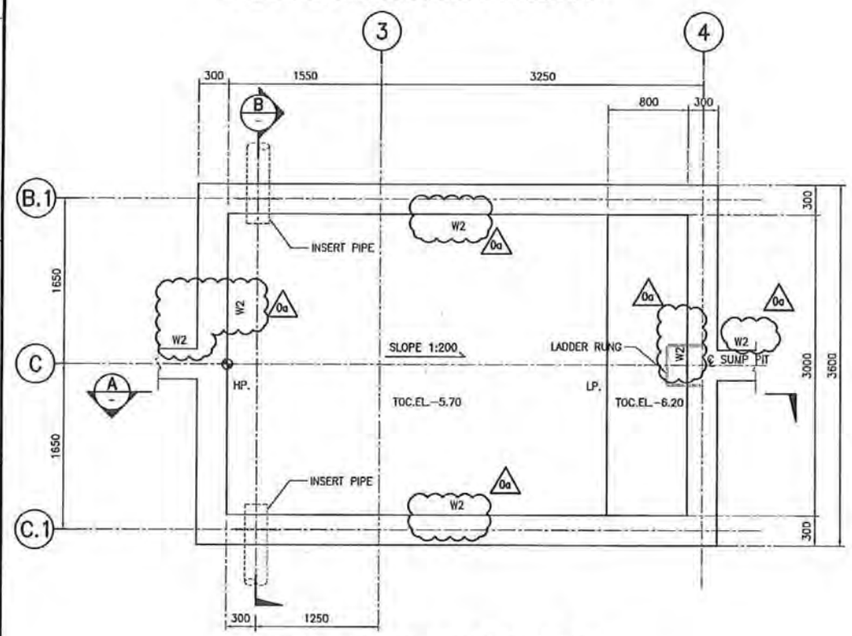

CT BLOWDOWN WATER PUMP PIT FOUNDATION PLAN AT EL.-5.70

SCALE 1:30

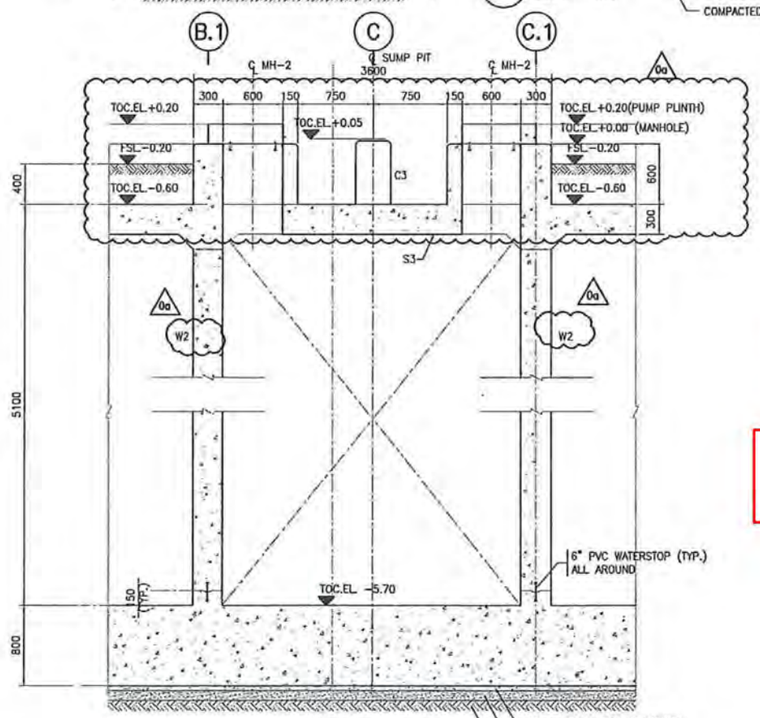

B SECTION

SCALE 1:30

NOTES :

1. ALL DIMENSIONS AND COORDINATES ARE IN MILLIMETERS, ALL ELEVATIONS ARE IN METERS UNLESS OTHERWISE INDICATED.
2. THE SUBCONTRACTOR HAS TO CHECK ALL DIMENSIONS & ELEVATIONS. ANY DISCREPANCY, CONFLICTING OR ERRONEOUS INFORMATION SHALL BE REPORTED TO THE TOYO & CLARIFIED PRIOR TO COMMENCING WORK.
3. THIS DRAWING SHALL BE READ IN CONJUNCTION WITH RELEVANT DRAWINGS & SPECIFICATIONS.
4. PROJECT DATUM EL.±0.000 IS EQUAL TO +2.400 m. MSL.
5. CONTROL POINT IS PROJECT BENCH MARK NO. PBM-3 , LOCATED AT COORDINATES OF TRUE NORTH ; TN=1,576,136.080 M., TRUE EAST ; TE = 671,234.184 M., EL. = 2.170 MSL. ; REFER TO TOPOGRAPHIC MAP , PREPARED BY INFRATECH ASTM CO.,LTD.
6. SUBSOIL UNDERNEATH ALL PILE FOUNDATIONS SHALL BE INSPECTED BY THE CONTRACTOR PRIOR TO LAYING OF BLINDING LAYER. RELATIVE COMPACTION OF FILLING SUBSOIL MATERAIL UNDERNEATH ALL PILE FOUNDATIONS SHALL BE AT LEAST 80% STANDARD PROCTOR DENSITY.
7. STRUCTURAL REQUIREMENT
   - 7.1 MINIMUM CONCRETE COMPRESSIVE STRENGTH 28 DAYS (CYLINDER)
     - -FOR REINFORCED CONCRETE MEMBERS ABOVE EL.±0.00 — fc'=27.5 MPa
     - -FOR REINFORCED CONCRETE MEMBERS AT OR BELOW EL.±0.00 — fc'=31 MPa
     - -FOR ROAD, GUTTER & DUCTBANKS — fc'=31 MPa
     - -LEAN CONCRETE — fc'=13.7 MPa
   - 7.2 STEEL REINFORCEMENT
     - -MINIMUM SPECIFIED YIELD STRENGTH FOR DEFORMED — fy=400 MPa
     - -MINIMUM SPECIFIED YIELD STRENGTH FOR ROUND BAR — fy=240 MPa
   - 7.3. REQUIREMENTS FOR 31MPa REINFORCED CONCRETE MEMBER
     - -CEMENT SHALL CONFORM TO ASTM C150 TYPE V, OR ASTM C595 IP(HS), IS(HS), IT(HS)
     - -MAXIMUM WATER-CEMENT RATIO = 0.39
     - -MINIMUM COVER TO REINFORCEMENT: db<=16mm, COVER = 50mm
       db>16mm, COVER = 60mm
8. CONCRETE FINISH
   - -TOP OF FOUNDATION ABOVE GROUND — U3 STEEL TROWELED FINISH
   - -TOP OF FOUNDATION BELOW GROUND — U2 WOOD FLOATED FINISH
   - -TOP OF PLINTHS TO BE GROUTED — ROUGH FINISH MORE THAN 6 MM. PROFILE
   - -TOP OF OTHER PLINTHS, GUTTER — U3 STEEL TROWELED FINISH
   - -GUTTER (BASE) — U2 WOOD FLOATED FINISH
   - -SIDES OF PLINTHS — F2 SMOOTH FINISH
   - -PORTION OF FOUNDATION ABOVE GROUND — F2 SMOOTH FINISH
   - -PORTION OF FOUNDATION BELOW GROUND — F1 ROUGH FINISH
   - -INSIDE WALL SURFACE — F2 SMOOTH FINISH
9. THE EARTHING SYSTEM UNDER CONCRETE FOUNDATIONS SHALL BE COORDINATED AND FINISHED BEFORE CONCRETE POURING.
10. WATERPROOF ADMIXTURE APPROVED BY TOYO SHALL BE ADDED TO THE CONCRETE MIX.

ABBREVIATIONS:

℄	CENTER LINE	TOF.	TOP OF FOUNDATION
MM.	MILLIMETER	TOP.	TOP OF PLATE
M.	METER	FSL.	FINISHED SURFACE LEVEL
PCO.	PILE CUT-OFF	TOC.	TOP OF CONCRETE
BOF.	BOTTOM OF FOUNDATION	PIL.	PIPE INVERT LEVEL
BOC.	BOTTOM OF CONCRETE	HP.	HIGHEST POINT

REFERENCE DRAWINGS:

1. GBL-001-C-016-012	CT BLOWDOWN/WASTE WATER HOLDING PONDS FRAMING PLAN AT EL. -0.60
2. 12SPP-001-C-022-311101	TYPICAL SUMP PIT INSERT PIPE, PIPE SLEEVE & AIR VENT DETAILS
3. 12SPP-001-C-022-311102	TYPICAL SUMP PIT MANHOLE COVER & LADDER RUNG DETAILS
4. 12SPP-001-C-022-310102	STRUCTURE SUMP PIT TYPE 1, REINFORCEMENT DETAILS

The approval or deemed approval of drawings and documents by Owner shall not relieve Contractor/Suppliers of any of its obligations or liabilities under the Construction/supply Contract

A – APPROVED

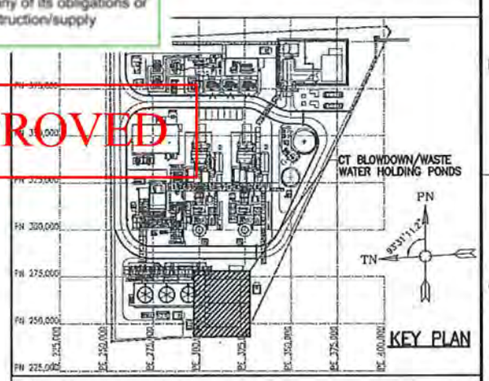

FINAL APPROVED FOR CONSTRUCTION

Rev. No.		Date	Description	Prepd.	Chkd.	Appd.	Authd.
0	0a	28/04/2017	FINAL APPROVED FOR CONSTRUCTION	WRP	ACB	MU	
A	A01	03/03/2017	FOR APPROVAL	WRP	ACB	MU	

Gulf MP

TOYO ENGINEERING

PÖYRY
Pöyry Energy Ltd.
1126/2 Vanit Building II
2nd Floor, Room No 2202-2204
New petchburi Road, Makkasan
Rajchthewi, Bangkok Thailand 10400

Project Title : Gulf MP

Document Title : STRUCTURE CT BLOWDOWN/WASTE WATER PUMP PIT PLAN & SECTIONS

Prepd.	SKS
Chkd.	ACB
Appd.	MU
Authd.	–
DATE	12/07/15

Document No.: GBL-001-C-016-111

Project No.: 9HX192092

Page No.: –

Rev. 0a

Scale: 1:30

A1

File Name: GBL-001-C-016-111_0a_A01

Copyright 2014 All right Reserved : Pöyry Energy Ltd.

M:\Thailand\9HX192092 Gulf MP Project\07 GBL\2 ENG MGMT\2.2 DRAFTING-WP\Civil\016 Utilities- Water & Sewer\CT BLOWDOWN_WASTE WATER HOLDING PONDS\FOR CONSTRUCTION\GBL-001-C-016-111_0a_A01.dwg

ภาคผนวก ข-14

ผลการตรวจวัดคุณภาพน้ำทิ้งจากระบบ Online Monitoring

GBL Waste water parameter

DATE	Waste water flow (T/Hr)	pH	Conduct. (uS/CM)	Waste water temperature (Deg C)
04-Jul-23 10:00:00	6.77	6.78	1597.88	32.99
05-Jul-23 10:00:00	6.74	6.75	1460.68	32.71
05-Jul-23 11:00:00	6.75	6.76	1454.98	33.21
05-Jul-23 12:00:00	6.75	6.76	1449.28	32.88
05-Jul-23 13:00:00	6.73	6.76	1443.57	32.67
05-Jul-23 14:00:00	6.70	6.76	1437.87	32.44
05-Jul-23 15:00:00	6.67	6.76	1435.28	32.43
05-Jul-23 16:00:00	6.63	6.75	1434.51	32.51
14-Jul-23 20:00:00	7.06	6.82	1411.97	31.43
14-Jul-23 21:00:00	7.03	6.85	1404.53	31.38
14-Jul-23 22:00:00	7.00	6.87	1397.09	31.44
14-Jul-23 23:00:00	6.96	6.90	1389.65	31.51
15-Jul-23 00:00:00	6.93	6.89	1385.66	31.55
15-Jul-23 01:00:00	6.90	6.88	1385.89	31.59
15-Jul-23 02:00:00	6.87	6.87	1386.12	31.63
15-Jul-23 03:00:00	6.84	6.86	1386.34	31.67
15-Jul-23 04:00:00	6.80	6.87	1386.57	31.71
15-Jul-23 05:00:00	6.76	6.89	1386.79	31.75
15-Jul-23 06:00:00	6.72	6.90	1387.02	31.79
18-Jul-23 18:00:00	6.89	7.08	1300.12	31.85
18-Jul-23 19:00:00	6.86	7.11	1299.14	31.68
18-Jul-23 20:00:00	6.84	7.14	1298.17	31.61
18-Jul-23 21:00:00	6.81	7.17	1297.19	31.62
18-Jul-23 22:00:00	6.79	7.14	1296.22	31.63
21-Jul-23 09:00:00	6.87	7.12	1225.34	33.53
21-Jul-23 10:00:00	6.86	7.08	1219.91	32.90
21-Jul-23 11:00:00	6.78	7.06	1214.48	33.16
21-Jul-23 12:00:00	6.78	7.04	1209.04	33.26
21-Jul-23 13:00:00	6.72	7.03	1203.61	33.25
21-Jul-23 14:00:00	6.67	7.01	1230.62	32.94
21-Jul-23 15:00:00	6.61	7.00	1230.26	31.72
23-Jul-23 14:00:00	7.19	7.12	1121.07	33.50
23-Jul-23 15:00:00	7.15	7.10	1083.14	33.50
23-Jul-23 16:00:00	7.12	7.11	1058.61	33.50
23-Jul-23 17:00:00	7.09	7.12	1035.31	33.50
23-Jul-23 18:00:00	7.05	7.13	1017.71	33.50
23-Jul-23 19:00:00	7.02	7.14	1007.44	33.50
23-Jul-23 20:00:00	6.98	7.16	997.17	32.10
23-Jul-23 21:00:00	6.95	7.18	986.90	32.10
23-Jul-23 22:00:00	6.90	7.20	976.64	31.51
23-Jul-23 23:00:00	6.86	7.20	973.91	31.50
24-Jul-23 00:00:00	6.81	7.20	972.74	31.49
24-Jul-23 01:00:00	6.76	7.20	971.57	31.55
24-Jul-23 02:00:00	6.72	7.19	970.40	31.63
24-Jul-23 03:00:00	6.67	7.19	969.23	31.71
24-Jul-23 04:00:00	6.63	7.19	968.07	31.79

GBL Waste water parameter

DATE	Waste water flow (T/Hr)	pH	Conduct. (uS/CM)	Waste water temperature (Deg C)
29-Jul-23 05:00:00	7.04	7.35	1009.03	30.40
29-Jul-23 06:00:00	6.98	7.32	1006.62	30.62
29-Jul-23 07:00:00	6.92	7.27	1011.37	31.08
30-Jul-23 00:00:00	6.93	7.27	1029.44	29.99
30-Jul-23 01:00:00	6.89	7.26	1036.45	30.48
30-Jul-23 02:00:00	6.85	7.25	1043.47	30.72
30-Jul-23 03:00:00	6.80	7.24	1050.48	30.91
30-Jul-23 04:00:00	6.76	7.23	1057.50	31.10
30-Jul-23 05:00:00	6.72	7.22	1064.52	31.16
30-Jul-23 06:00:00	6.67	7.21	1068.17	31.22
18-Aug-23 15:00:00	5.45	6.97	964.41	33.23
18-Aug-23 16:00:00	5.42	6.96	966.16	33.23
18-Aug-23 17:00:00	5.40	6.96	967.91	33.24
18-Aug-23 18:00:00	5.37	6.95	969.66	33.24
18-Aug-23 19:00:00	5.35	6.94	972.35	33.25
18-Aug-23 20:00:00	5.34	6.94	975.59	33.25
18-Aug-23 21:00:00	5.30	6.93	978.83	33.25
18-Aug-23 22:00:00	5.21	6.93	982.08	33.25
18-Aug-23 23:00:00	5.12	6.92	985.32	33.25
19-Aug-23 00:00:00	5.06	6.92	988.56	33.25
19-Aug-23 01:00:00	5.03	6.92	991.80	33.25
22-Aug-23 09:00:00	5.21	7.01	1005.46	33.60
22-Aug-23 10:00:00	5.19	6.99	1004.46	33.23
22-Aug-23 13:00:00	5.08	7.07	1002.57	33.50
22-Aug-23 14:00:00	5.10	7.05	1004.71	33.50
22-Aug-23 15:00:00	5.08	7.02	1006.84	33.05
26-Aug-23 01:00:00	5.42	6.92	1034.51	30.16
26-Aug-23 02:00:00	5.43	6.94	1042.49	30.52
26-Aug-23 03:00:00	5.39	6.96	1050.46	30.51
26-Aug-23 04:00:00	5.36	6.98	1058.44	30.63
26-Aug-23 05:00:00	5.32	7.00	1066.41	30.71
26-Aug-23 06:00:00	5.28	7.02	1074.39	30.85
26-Aug-23 07:00:00	5.24	7.02	1076.25	31.22
26-Aug-23 08:00:00	5.21	7.02	1069.08	32.11
26-Aug-23 09:00:00	5.17	7.01	1067.35	32.85
26-Aug-23 10:00:00	5.13	7.00	1065.62	33.41
31-Aug-23 09:00:00	4.08	6.76	1115.76	33.52
31-Aug-23 11:00:00	4.07	6.64	663.00	33.39
31-Aug-23 12:00:00	4.05	6.62	663.00	33.39
31-Aug-23 13:00:00	4.03	6.61	663.00	33.39
31-Aug-23 14:00:00	4.01	6.60	663.00	33.39
31-Aug-23 15:00:00	3.99	6.58	663.00	33.39
04-Sep-23 22:00:00	4.73	6.88	1193.59	31.70
04-Sep-23 23:00:00	4.70	6.89	1183.71	31.73
05-Sep-23 00:00:00	4.68	6.89	1173.83	31.73
05-Sep-23 01:00:00	4.65	6.89	1164.36	31.61

GBL Waste water parameter

DATE	Waste water flow (T/Hr)	pH	Conduct. (uS/CM)	Waste water temperature (Deg C)
05-Sep-23 08:00:00	4.65	7.01	1191.42	31.44
05-Sep-23 09:00:00	4.75	6.86	1191.63	33.89
05-Sep-23 23:00:00	4.88	7.11	1175.19	28.97
06-Sep-23 08:00:00	5.48	6.79	1157.46	32.27
06-Sep-23 09:00:00	5.49	6.71	1153.03	33.03
06-Sep-23 10:00:00	5.49	6.71	1148.61	33.90
06-Sep-23 11:00:00	5.48	6.78	1163.20	33.00
06-Sep-23 12:00:00	5.46	6.74	1159.37	33.00
06-Sep-23 13:00:00	5.44	6.70	1155.54	33.00
06-Sep-23 14:00:00	5.41	6.68	1151.70	33.00
06-Sep-23 15:00:00	5.39	6.67	1147.87	33.00
08-Sep-23 08:00:00	5.54	6.79	1126.34	32.42
08-Sep-23 09:00:00	5.50	6.76	1102.65	33.86
09-Sep-23 08:00:00	5.52	6.83	1115.98	31.86
09-Sep-23 12:00:00	5.43	6.90	1090.77	33.84
09-Sep-23 13:00:00	5.51	6.93	1084.47	33.48
09-Sep-23 14:00:00	5.43	6.93	1081.04	33.98
10-Sep-23 08:00:00	5.72	7.14	1137.16	32.35
10-Sep-23 09:00:00	5.84	7.09	1146.68	32.53
10-Sep-23 10:00:00	5.75	7.04	1141.43	33.91
10-Sep-23 11:00:00	5.78	7.03	1136.17	33.82
10-Sep-23 12:00:00	5.77	7.02	1130.92	33.83
10-Sep-23 13:00:00	5.76	7.01	1125.66	33.83
10-Sep-23 14:00:00	5.75	7.00	1120.41	33.84
10-Sep-23 15:00:00	5.74	6.99	1115.15	33.84
10-Sep-23 16:00:00	5.73	6.98	1109.89	33.85
10-Sep-23 17:00:00	5.73	6.97	1104.46	32.37
10-Sep-23 18:00:00	5.72	6.95	1098.50	31.98
10-Sep-23 19:00:00	5.68	6.88	1092.54	31.90
10-Sep-23 20:00:00	5.65	6.83	1086.58	31.86
10-Sep-23 21:00:00	5.62	6.81	1080.62	31.82
10-Sep-23 22:00:00	5.59	6.81	1074.66	31.79
10-Sep-23 23:00:00	5.56	6.84	1068.34	31.75
11-Sep-23 00:00:00	5.53	6.86	1060.88	31.73
11-Sep-23 01:00:00	5.50	6.87	1053.42	31.67
11-Sep-23 02:00:00	5.47	6.87	1045.97	31.58
11-Sep-23 03:00:00	5.42	6.88	1042.53	31.57
11-Sep-23 04:00:00	5.38	6.88	1041.02	31.62
11-Sep-23 05:00:00	5.33	6.88	1039.50	31.66
11-Sep-23 06:00:00	5.29	6.89	1037.99	31.69
11-Sep-23 07:00:00	5.24	6.90	1036.47	31.72
11-Sep-23 08:00:00	5.19	6.92	1034.96	31.84
11-Sep-23 09:00:00	5.15	6.94	1033.45	32.29
11-Sep-23 10:00:00	5.10	6.96	1031.93	32.39
18-Sep-23 10:00:00	5.92	7.31	1005.29	33.17
18-Sep-23 11:00:00	5.88	7.33	1007.83	33.22

GBL Waste water parameter

DATE	Waste water flow (T/Hr)	pH	Conduct. (uS/CM)	Waste water temperature (Deg C)
18-Sep-23 12:00:00	5.84	7.36	1010.38	32.76
18-Sep-23 13:00:00	5.80	7.39	1012.93	33.06
18-Sep-23 14:00:00	5.77	7.37	1015.48	33.43
18-Sep-23 15:00:00	5.73	7.38	1018.03	33.38
18-Sep-23 16:00:00	5.69	7.42	1020.58	31.08
18-Sep-23 17:00:00	5.65	7.44	1023.13	31.15
18-Sep-23 18:00:00	5.61	7.49	1026.03	30.31
18-Sep-23 19:00:00	5.57	7.50	1029.09	30.61
18-Sep-23 20:00:00	5.53	7.47	1032.15	30.73
18-Sep-23 21:00:00	5.49	7.45	1035.21	30.68
18-Sep-23 22:00:00	5.45	7.43	1038.27	30.95
18-Sep-23 23:00:00	5.41	7.41	1041.33	31.03
19-Sep-23 00:00:00	5.37	7.39	1044.39	31.05
19-Sep-23 01:00:00	5.33	7.37	1047.44	31.07
19-Sep-23 02:00:00	5.28	7.36	1050.34	31.08
19-Sep-23 03:00:00	5.23	7.35	1053.17	31.10
19-Sep-23 04:00:00	5.18	7.34	1056.00	31.11
22-Sep-23 20:00:00	5.85	6.94	1097.01	30.82
22-Sep-23 21:00:00	5.82	6.94	1094.77	30.53
22-Sep-23 22:00:00	5.80	6.93	1098.30	30.64
22-Sep-23 23:00:00	5.77	6.93	1101.83	30.45
23-Sep-23 00:00:00	5.74	6.92	1105.36	30.43
23-Sep-23 01:00:00	5.71	6.94	1108.89	30.54
23-Sep-23 02:00:00	5.68	6.96	1112.42	30.37
23-Sep-23 03:00:00	5.65	6.98	1115.94	30.47
23-Sep-23 04:00:00	5.61	7.00	1119.47	30.64
23-Sep-23 05:00:00	5.55	7.01	1120.24	30.82
23-Sep-23 06:00:00	5.50	7.01	1120.91	30.95
23-Sep-23 07:00:00	5.45	7.02	1121.58	31.07
23-Sep-23 08:00:00	5.40	7.02	1122.25	31.43
23-Sep-23 09:00:00	5.35	7.02	1122.92	32.18
23-Sep-23 10:00:00	5.30	7.01	1123.59	32.69
23-Sep-23 11:00:00	5.25	7.01	1124.26	32.22
23-Sep-23 12:00:00	5.20	7.00	1124.67	32.94
23-Sep-23 13:00:00	5.14	7.00	1123.22	32.99
26-Sep-23 11:00:00	5.52	6.92	1145.89	33.83
26-Sep-23 12:00:00	5.46	6.98	1147.80	33.42
26-Sep-23 13:00:00	5.44	7.01	1149.71	33.23
26-Sep-23 14:00:00	5.41	7.02	1151.63	32.88
26-Sep-23 15:00:00	5.39	7.04	1153.54	32.36
26-Sep-23 16:00:00	5.37	7.05	1155.45	32.05
26-Sep-23 17:00:00	5.35	7.07	1157.37	31.85
26-Sep-23 18:00:00	5.32	7.08	1156.38	31.65
26-Sep-23 19:00:00	5.30	7.10	1151.02	31.49
26-Sep-23 20:00:00	5.28	7.12	1145.67	31.48
26-Sep-23 21:00:00	5.26	7.12	1140.31	31.47

GBL Waste water parameter

DATE	Waste water flow (T/Hr)	pH	Conduct. (uS/CM)	Waste water temperature (Deg C)
26-Sep-23 22:00:00	5.25	7.11	1134.95	31.42
26-Sep-23 23:00:00	5.23	7.11	1129.60	31.30
03-Oct-23 21:00:00	6.05	7.50	959.87	27.74
03-Oct-23 22:00:00	6.02	7.62	950.04	29.22
03-Oct-23 23:00:00	5.98	7.70	955.25	29.28
04-Oct-23 00:00:00	5.95	7.70	956.93	28.51
04-Oct-23 01:00:00	5.91	7.70	957.14	29.19
04-Oct-23 02:00:00	5.88	7.70	957.35	29.78
04-Oct-23 03:00:00	5.85	7.70	957.56	29.72
04-Oct-23 04:00:00	5.81	7.70	957.78	30.41
04-Oct-23 05:00:00	5.78	7.70	957.99	30.60
04-Oct-23 06:00:00	5.74	7.70	958.20	30.62
05-Oct-23 21:00:00	5.74	7.45	907.69	29.24
05-Oct-23 22:00:00	5.72	7.45	915.84	29.97
05-Oct-23 23:00:00	5.70	7.20	923.48	29.48
06-Oct-23 09:00:00	5.62	7.11	934.07	30.91
06-Oct-23 10:00:00	5.61	7.11	937.82	31.12
06-Oct-23 11:00:00	5.59	7.11	941.57	32.03
06-Oct-23 12:00:00	5.58	7.11	945.32	32.15
06-Oct-23 13:00:00	5.54	7.11	948.32	32.21
06-Oct-23 14:00:00	5.49	7.11	949.98	32.86
06-Oct-23 15:00:00	5.45	7.11	951.64	31.93
06-Oct-23 16:00:00	5.40	7.11	953.30	31.65
06-Oct-23 17:00:00	5.35	7.11	954.96	31.39
06-Oct-23 18:00:00	5.31	7.11	956.62	31.25
06-Oct-23 19:00:00	5.26	7.11	958.27	31.11
08-Oct-23 18:00:00	5.38	7.13	993.42	30.82
08-Oct-23 19:00:00	5.35	7.13	986.38	30.88
10-Oct-23 21:00:00	5.45	7.23	993.11	29.25
10-Oct-23 22:00:00	5.43	7.23	991.02	30.01
10-Oct-23 23:00:00	5.41	7.23	993.86	30.03
11-Oct-23 00:00:00	5.39	7.23	999.30	30.02
11-Oct-23 01:00:00	5.37	7.23	1004.74	29.79
11-Oct-23 02:00:00	5.36	7.23	1010.18	29.76
11-Oct-23 03:00:00	5.34	7.23	1015.63	29.83
11-Oct-23 04:00:00	5.32	7.23	1021.07	29.92
11-Oct-23 05:00:00	5.29	7.23	1026.51	30.01
11-Oct-23 06:00:00	5.25	7.23	1031.95	30.10
11-Oct-23 07:00:00	5.21	7.23	1034.94	30.35
11-Oct-23 08:00:00	5.18	7.23	1037.34	30.75
11-Oct-23 09:00:00	5.14	7.23	1039.75	31.11
11-Oct-23 10:00:00	5.10	7.23	1042.15	31.84
14-Oct-23 08:00:00	5.59	7.11	1023.66	32.00
14-Oct-23 09:00:00	5.56	7.11	1010.63	32.00
14-Oct-23 10:00:00	5.53	7.11	1002.73	32.00
14-Oct-23 11:00:00	5.50	7.11	998.72	32.00

GBL Waste water parameter

DATE	Waste water flow (T/Hr)	pH	Conduct. (uS/CM)	Waste water temperature (Deg C)
14-Oct-23 12:00:00	5.47	7.11	994.72	32.00
16-Oct-23 11:00:00	5.13	7.13	957.73	33.50
16-Oct-23 12:00:00	5.19	7.13	982.70	33.50
16-Oct-23 13:00:00	5.15	7.13	972.58	33.50
16-Oct-23 14:00:00	5.12	7.13	962.46	33.50
16-Oct-23 15:00:00	5.09	7.13	952.33	33.50
16-Oct-23 16:00:00	5.06	7.13	942.21	33.50
16-Oct-23 17:00:00	5.02	7.13	935.30	33.50
16-Oct-23 18:00:00	4.99	7.13	935.29	33.50
16-Oct-23 19:00:00	4.95	7.13	935.27	33.50
16-Oct-23 20:00:00	4.90	7.13	935.26	33.50
21-Oct-23 20:00:00	5.44	7.11	998.99	29.01
21-Oct-23 21:00:00	5.42	7.11	1034.00	29.49
21-Oct-23 22:00:00	5.40	7.11	1069.00	29.81
21-Oct-23 23:00:00	5.38	7.11	1099.47	29.65
22-Oct-23 00:00:00	5.36	7.11	1117.86	29.94
22-Oct-23 01:00:00	5.34	7.11	1136.25	30.30
22-Oct-23 02:00:00	5.30	7.11	1154.64	30.70
22-Oct-23 03:00:00	5.25	7.11	1161.47	30.76
22-Oct-23 04:00:00	5.20	7.11	1167.92	30.83
22-Oct-23 05:00:00	5.16	7.11	1174.36	30.85
22-Oct-23 06:00:00	5.11	7.11	1180.81	30.77
25-Oct-23 17:00:00	5.44	6.70	1118.77	31.68
25-Oct-23 18:00:00	5.45	6.71	1116.55	31.48
25-Oct-23 19:00:00	5.45	6.72	1114.33	31.40
25-Oct-23 20:00:00	5.46	6.73	1112.11	31.37
26-Oct-23 08:00:00	5.43	6.74	1066.74	32.94
26-Oct-23 09:00:00	5.41	6.71	1054.82	32.80
26-Oct-23 10:00:00	5.44	6.72	1051.29	32.80
26-Oct-23 11:00:00	5.47	6.73	1047.76	32.80
26-Oct-23 12:00:00	5.49	6.74	1044.23	32.80
26-Oct-23 13:00:00	5.44	6.76	1040.70	32.80
26-Oct-23 14:00:00	5.40	6.77	1037.17	32.80
26-Oct-23 15:00:00	5.36	6.78	1033.63	32.80
26-Oct-23 16:00:00	5.32	6.79	1030.10	32.80
26-Oct-23 17:00:00	5.27	6.80	1029.74	32.80
26-Oct-23 18:00:00	5.23	6.80	1034.05	32.80
26-Oct-23 19:00:00	5.18	6.79	1038.35	31.62
29-Oct-23 08:00:00	5.96	7.85	954.54	30.43
29-Oct-23 09:00:00	5.96	7.85	909.44	31.76
29-Oct-23 11:00:00	5.90	7.91	882.95	32.00
29-Oct-23 12:00:00	5.85	7.96	871.11	32.20
29-Oct-23 13:00:00	5.81	7.96	859.20	32.20
29-Oct-23 14:00:00	5.76	8.00	847.30	32.60
29-Oct-23 15:00:00	5.72	8.00	835.39	32.60
29-Oct-23 16:00:00	5.68	8.00	823.48	32.60

GBL Waste water parameter

DATE	Waste water flow (T/Hr)	pH	Conduct. (uS/CM)	Waste water temperature (Deg C)
29-Oct-23 17:00:00	5.63	8.00	818.55	32.60
29-Oct-23 18:00:00	5.59	8.10	814.88	31.00
29-Oct-23 19:00:00	5.55	8.10	811.20	31.00
29-Oct-23 20:00:00	5.52	8.10	807.52	31.00
29-Oct-23 21:00:00	5.48	8.10	803.85	31.00
29-Oct-23 22:00:00	5.45	8.10	800.17	31.00
29-Oct-23 23:00:00	5.42	8.10	796.49	31.00
30-Oct-23 00:00:00	5.39	8.10	792.81	31.00
30-Oct-23 01:00:00	5.36	8.10	787.36	31.00
30-Oct-23 02:00:00	5.33	8.10	781.91	31.00
30-Oct-23 03:00:00	5.29	8.10	776.45	31.00
30-Oct-23 04:00:00	5.23	8.10	771.00	31.00
30-Oct-23 05:00:00	5.16	8.10	766.35	31.00
30-Oct-23 06:00:00	5.10	8.10	765.89	31.00
03-Nov-23 14:00:00	5.39	6.98	801.38	32.55
03-Nov-23 15:00:00	5.50	6.98	803.13	32.43
03-Nov-23 16:00:00	5.48	6.98	804.89	32.02
03-Nov-23 17:00:00	5.46	6.98	807.63	31.80
03-Nov-23 18:00:00	5.45	6.98	810.37	31.57
03-Nov-23 19:00:00	5.43	6.98	813.11	31.52
03-Nov-23 20:00:00	5.40	6.98	815.86	31.46
03-Nov-23 21:00:00	5.35	6.98	818.60	31.40
03-Nov-23 22:00:00	5.30	6.98	821.34	31.38
03-Nov-23 23:00:00	5.25	6.98	824.08	31.36
04-Nov-23 00:00:00	5.20	6.98	826.31	31.35
04-Nov-23 01:00:00	5.15	6.98	825.97	31.33
10-Nov-23 19:00:00	5.61	7.12	921.19	27.29
10-Nov-23 20:00:00	5.73	7.12	912.32	29.31
10-Nov-23 21:00:00	5.69	7.12	921.46	29.66
10-Nov-23 22:00:00	5.66	7.12	930.61	30.07
10-Nov-23 23:00:00	5.62	7.12	939.76	29.98
11-Nov-23 00:00:00	5.59	7.12	948.91	30.02
11-Nov-23 01:00:00	5.56	7.12	958.06	30.11
11-Nov-23 02:00:00	5.52	7.12	966.17	30.24
11-Nov-23 03:00:00	5.49	7.12	968.00	30.42
11-Nov-23 04:00:00	5.43	7.12	969.84	30.61
11-Nov-23 05:00:00	5.38	7.12	971.67	30.79
11-Nov-23 06:00:00	5.33	7.12	973.51	30.94
11-Nov-23 07:00:00	5.28	7.12	975.34	31.08
11-Nov-23 08:00:00	5.23	7.12	977.17	31.68
11-Nov-23 09:00:00	5.18	7.12	979.01	32.24
11-Nov-23 10:00:00	5.13	7.12	979.64	33.53
16-Nov-23 19:00:00	6.64	7.12	943.33	30.69
16-Nov-23 20:00:00	6.61	7.12	950.27	30.90
16-Nov-23 21:00:00	6.59	7.12	946.68	31.02
16-Nov-23 22:00:00	6.57	7.12	943.09	29.53

GBL Waste water parameter

DATE	Waste water flow (T/Hr)	pH	Conduct. (uS/CM)	Waste water temperature (Deg C)
16-Nov-23 23:00:00	6.54	7.12	939.51	30.92
17-Nov-23 00:00:00	6.52	7.12	935.92	31.06
17-Nov-23 01:00:00	6.49	7.12	934.00	31.21
17-Nov-23 02:00:00	6.47	7.12	934.68	31.21
17-Nov-23 03:00:00	6.44	7.12	935.36	31.21
17-Nov-23 04:00:00	6.42	7.12	936.04	31.20
17-Nov-23 05:00:00	6.39	7.12	936.72	31.20
17-Nov-23 06:00:00	6.36	7.12	937.40	31.20
17-Nov-23 07:00:00	6.34	7.12	938.08	31.30
26-Nov-23 14:00:00	6.87	7.52	867.98	32.21
26-Nov-23 15:00:00	6.85	7.52	867.60	32.21
26-Nov-23 16:00:00	6.83	7.52	871.72	32.21
26-Nov-23 17:00:00	6.81	7.52	875.85	32.21
26-Nov-23 18:00:00	6.79	7.52	879.97	32.21
26-Nov-23 19:00:00	6.76	7.52	884.09	32.21
26-Nov-23 20:00:00	6.74	7.65	888.21	30.41
26-Nov-23 21:00:00	6.72	7.65	892.33	30.41
26-Nov-23 22:00:00	6.70	7.65	896.23	30.41
26-Nov-23 23:00:00	6.66	7.65	898.34	30.41
27-Nov-23 00:00:00	6.63	7.65	900.45	30.41
27-Nov-23 01:00:00	6.59	7.65	902.56	30.41
27-Nov-23 02:00:00	6.56	7.65	904.67	30.40
27-Nov-23 03:00:00	6.53	7.65	906.78	30.39
29-Nov-23 10:00:00	6.84	8.06	843.63	32.20
29-Nov-23 11:00:00	6.81	8.11	839.96	31.38
29-Nov-23 12:00:00	6.77	7.91	848.77	31.76
29-Nov-23 13:00:00	6.74	7.85	844.17	31.89
29-Nov-23 14:00:00	6.71	7.85	838.60	31.31
29-Nov-23 15:00:00	6.67	8.04	833.02	31.01
29-Nov-23 16:00:00	6.64	8.11	839.63	30.72
29-Nov-23 17:00:00	6.61	8.16	838.63	30.43
29-Nov-23 18:00:00	6.57	8.17	837.62	30.14
05-Dec-23 02:00:00	6.50	8.23	1008.31	27.94
05-Dec-23 03:00:00	6.55	8.19	1010.21	28.85
05-Dec-23 04:00:00	6.48	8.19	1012.11	28.58
05-Dec-23 05:00:00	6.41	8.19	1014.01	28.55
05-Dec-23 06:00:00	6.35	8.20	1015.91	28.59
05-Dec-23 07:00:00	6.28	8.22	1017.82	28.87
05-Dec-23 08:00:00	6.21	8.34	1019.72	31.11
05-Dec-23 09:00:00	6.15	8.31	1021.62	33.27
05-Dec-23 10:00:00	6.07	8.20	1036.42	33.38
05-Dec-23 11:00:00	6.03	8.09	1035.98	33.52
05-Dec-23 12:00:00	5.99	8.06	1035.55	32.32
05-Dec-23 13:00:00	5.96	8.05	1035.11	31.88
05-Dec-23 14:00:00	5.92	7.85	1034.67	31.72
05-Dec-23 15:00:00	5.88	7.82	1034.23	31.91

GBL Waste water parameter

DATE	Waste water flow (T/Hr)	pH	Conduct. (uS/CM)	Waste water temperature (Deg C)
05-Dec-23 16:00:00	5.84	7.87	1033.80	31.65
05-Dec-23 17:00:00	5.80	8.22	1033.36	30.50
09-Dec-23 19:00:00	6.10	8.34	997.07	29.71
09-Dec-23 20:00:00	6.07	8.34	999.99	29.49
09-Dec-23 21:00:00	6.04	8.33	1002.91	29.43
09-Dec-23 22:00:00	6.01	8.32	1005.84	29.37
09-Dec-23 23:00:00	5.98	8.31	1008.76	29.27
10-Dec-23 00:00:00	5.95	8.31	1011.69	29.18
10-Dec-23 01:00:00	5.92	8.30	1014.61	29.14
10-Dec-23 02:00:00	5.89	8.29	1017.54	29.13
10-Dec-23 03:00:00	5.84	8.29	1019.50	29.12
10-Dec-23 04:00:00	5.79	8.28	1021.34	29.10
10-Dec-23 05:00:00	5.74	8.28	1023.17	29.09
10-Dec-23 06:00:00	5.69	8.27	1025.00	29.08
10-Dec-23 07:00:00	5.64	8.27	1026.83	29.27
10-Dec-23 08:00:00	5.59	8.27	1028.66	31.10
10-Dec-23 09:00:00	5.54	8.27	1030.50	32.69
10-Dec-23 10:00:00	5.49	8.15	1032.49	33.96
10-Dec-23 11:00:00	5.36	7.95	1038.49	32.62
10-Dec-23 12:00:00	5.40	7.91	1044.50	32.56
10-Dec-23 13:00:00	5.43	7.78	1050.10	32.42
10-Dec-23 14:00:00	5.38	7.75	1054.08	31.94
17-Dec-23 10:00:00	6.27	8.29	1056.64	30.65
17-Dec-23 11:00:00	6.23	8.29	1061.09	30.65
17-Dec-23 12:00:00	6.19	8.29	1065.55	30.64
17-Dec-23 13:00:00	6.15	8.29	1070.01	30.63
17-Dec-23 14:00:00	6.11	8.30	1063.81	30.62
17-Dec-23 15:00:00	6.07	8.27	1069.08	30.62
17-Dec-23 16:00:00	6.04	8.26	1074.36	30.61
17-Dec-23 17:00:00	6.00	8.27	1079.64	30.60
17-Dec-23 18:00:00	5.95	8.27	1084.92	30.60
17-Dec-23 19:00:00	5.90	8.31	1090.20	30.60
17-Dec-23 20:00:00	5.85	8.33	1095.48	30.60
17-Dec-23 21:00:00	5.80	8.33	1100.76	30.60
17-Dec-23 22:00:00	5.75	8.33	1104.29	30.60
17-Dec-23 23:00:00	5.70	8.33	1106.85	30.60
18-Dec-23 00:00:00	5.65	8.33	1109.40	30.60
18-Dec-23 01:00:00	5.60	8.33	1111.96	30.60
18-Dec-23 02:00:00	5.55	8.32	1114.51	30.60
18-Dec-23 03:00:00	5.50	8.32	1117.07	30.60
18-Dec-23 04:00:00	5.45	8.32	1119.62	30.60
18-Dec-23 05:00:00	5.40	8.33	1122.18	30.60
18-Dec-23 06:00:00	5.35	8.36	1123.16	30.60
18-Dec-23 07:00:00	5.30	8.31	1123.77	30.60
22-Dec-23 08:00:00	5.67	7.31	1137.08	28.27
22-Dec-23 09:00:00	5.63	7.43	1145.34	30.92

GBL Waste water parameter

DATE	Waste water flow (T/Hr)	pH	Conduct. (uS/CM)	Waste water temperature (Deg C)
22-Dec-23 10:00:00	5.59	7.50	1153.60	32.66
22-Dec-23 11:00:00	5.55	7.65	1161.86	33.79
22-Dec-23 12:00:00	5.50	7.66	1170.12	33.68
22-Dec-23 13:00:00	5.46	7.68	1178.39	33.62
22-Dec-23 14:00:00	5.42	7.70	1186.65	31.91
22-Dec-23 15:00:00	5.30	7.69	1194.91	33.66
22-Dec-23 16:00:00	5.30	7.77	1198.80	32.69
27-Dec-23 07:00:00	5.52	7.16	1129.89	22.12
27-Dec-23 08:00:00	5.50	7.37	1137.58	28.26
27-Dec-23 09:00:00	5.47	7.36	1149.49	31.16
27-Dec-23 10:00:00	5.45	7.58	1161.40	32.84
27-Dec-23 11:00:00	5.42	7.61	1173.32	33.30
27-Dec-23 12:00:00	5.39	7.65	1185.23	33.71
27-Dec-23 13:00:00	5.37	7.58	1189.53	33.81
28-Dec-23 08:00:00	5.63	7.43	1259.63	28.05
28-Dec-23 09:00:00	5.58	7.57	1267.22	31.34
28-Dec-23 10:00:00	5.54	7.64	1274.82	32.86
28-Dec-23 11:00:00	5.50	7.64	1282.41	33.64
28-Dec-23 12:00:00	5.45	7.64	1289.87	33.94
min	3.99	6.58	663.00	22.12
max	7.19	8.36	1597.88	33.98

GBL CT Blowdown water parameter

Date	CT B/D Water Flow (T/Hr)	pH	Conduct. (uS/CM)	D.O. (mg/l)	CT B/D discharge Temp. (Deg C)
03-Jul-23 15:00:00	51.81	7.48	3221.38	8.90	33.50
03-Jul-23 16:00:00	51.79	7.48	3219.59	8.90	33.50
03-Jul-23 19:00:00	51.41	7.30	3211.00	8.92	32.10
03-Jul-23 20:00:00	51.30	7.10	3211.00	8.92	32.10
03-Jul-23 21:00:00	51.20	6.99	3211.00	8.92	32.10
03-Jul-23 22:00:00	51.09	7.03	3211.00	8.92	32.10
03-Jul-23 23:00:00	50.98	6.99	3211.00	8.92	32.10
04-Jul-23 23:00:00	51.64	6.89	2852.00	6.50	32.64
05-Jul-23 00:00:00	51.57	6.85	2852.00	6.50	32.76
05-Jul-23 01:00:00	51.50	6.84	2852.00	6.50	32.75
05-Jul-23 02:00:00	51.42	6.83	2852.00	6.50	32.71
05-Jul-23 03:00:00	51.33	6.81	2852.00	6.50	32.67
05-Jul-23 04:00:00	51.24	6.80	2751.00	6.50	32.62
07-Jul-23 19:00:00	52.43	7.51	2824.00	7.10	32.33
08-Jul-23 07:00:00	52.85	6.91	3221.00	8.65	32.33
08-Jul-23 08:00:00	52.80	6.89	3221.00	8.65	32.38
08-Jul-23 09:00:00	52.66	6.85	3221.00	8.65	32.38
08-Jul-23 10:00:00	52.53	6.92	3221.00	8.65	32.39
08-Jul-23 11:00:00	52.40	7.23	3221.00	8.65	32.40
08-Jul-23 12:00:00	52.33	7.38	3221.00	8.65	32.41
08-Jul-23 13:00:00	52.25	7.07	3221.00	8.65	32.42
08-Jul-23 14:00:00	52.14	7.45	3221.00	8.65	32.45
08-Jul-23 15:00:00	52.02	7.46	3221.00	8.65	32.48
08-Jul-23 16:00:00	51.90	7.51	3221.00	8.65	32.50
08-Jul-23 17:00:00	51.78	7.55	3221.00	8.65	32.53
08-Jul-23 18:00:00	51.66	7.49	3221.00	8.65	32.56
08-Jul-23 19:00:00	51.54	7.43	3221.00	8.65	32.59
08-Jul-23 20:00:00	51.42	7.33	3221.00	8.65	32.62
08-Jul-23 21:00:00	51.30	7.17	3221.00	8.65	32.64
08-Jul-23 22:00:00	51.18	7.03	3221.00	8.65	32.60
08-Jul-23 23:00:00	51.06	6.95	3221.00	8.65	32.57
09-Jul-23 00:00:00	50.94	6.92	3221.00	8.65	32.54
09-Jul-23 01:00:00	50.82	6.87	3221.00	8.65	32.50
09-Jul-23 02:00:00	50.70	6.85	3221.00	8.65	32.47
09-Jul-23 03:00:00	50.58	6.85	3221.00	8.65	32.37
09-Jul-23 04:00:00	50.48	6.86	3221.00	8.65	32.22
09-Jul-23 05:00:00	50.39	6.86	3221.00	8.65	32.08
09-Jul-23 06:00:00	50.31	6.86	3221.00	8.65	31.93
14-Jul-23 22:00:00	52.06	6.98	3320.00	9.25	32.09
14-Jul-23 23:00:00	52.02	7.21	3320.00	9.25	32.10
15-Jul-23 00:00:00	51.93	7.25	3320.00	9.25	32.12
15-Jul-23 01:00:00	51.83	7.28	3320.00	9.25	32.13
15-Jul-23 02:00:00	51.74	7.24	3320.00	9.25	32.07
15-Jul-23 03:00:00	51.64	7.23	3320.00	9.25	31.96
15-Jul-23 04:00:00	51.55	7.19	3320.00	9.25	31.85
16-Jul-23 20:00:00	53.07	7.03	3201.00	9.25	31.45
16-Jul-23 21:00:00	52.97	7.06	3201.00	9.25	31.47
16-Jul-23 22:00:00	52.86	7.11	3201.00	9.25	31.49

GBL CT Blowdown water parameter

Date	CT B/D Water Flow (T/Hr)	pH	Conduct. (uS/CM)	D.O. (mg/l)	CT B/D discharge Temp. (Deg C)
16-Jul-23 23:00:00	52.75	7.09	3201.00	9.25	31.51
17-Jul-23 00:00:00	52.59	7.08	3201.00	9.25	31.52
17-Jul-23 01:00:00	52.33	7.07	3201.00	9.25	31.54
17-Jul-23 02:00:00	52.21	7.07	3201.00	9.25	31.56
17-Jul-23 03:00:00	52.09	7.19	3201.00	9.25	31.57
17-Jul-23 04:00:00	51.97	7.43	3201.00	9.25	31.60
17-Jul-23 05:00:00	51.85	6.99	3201.00	9.25	31.62
17-Jul-23 06:00:00	51.80	6.91	3201.00	9.25	31.65
17-Jul-23 07:00:00	51.79	6.90	3201.00	9.25	31.68
17-Jul-23 08:00:00	51.64	6.95	3201.00	9.25	31.70
17-Jul-23 09:00:00	51.50	7.02	3221.00	9.35	31.73
17-Jul-23 10:00:00	51.36	7.17	3221.00	9.35	31.75
17-Jul-23 11:00:00	51.21	7.23	3221.00	9.35	31.78
17-Jul-23 12:00:00	51.06	7.26	3221.00	9.35	31.86
17-Jul-23 13:00:00	50.90	7.27	3221.00	9.35	31.93
21-Jul-23 16:00:00	51.78	7.78	3145.00	5.71	32.85
21-Jul-23 17:00:00	51.70	7.83	3145.00	5.71	32.86
21-Jul-23 18:00:00	51.62	7.87	3145.00	5.71	32.87
21-Jul-23 19:00:00	51.54	7.83	3145.00	5.71	32.87
21-Jul-23 20:00:00	51.47	7.60	3220.00	6.32	32.88
21-Jul-23 21:00:00	51.39	7.47	3220.00	6.32	32.89
21-Jul-23 22:00:00	51.31	7.46	3211.00	7.23	32.90
21-Jul-23 23:00:00	51.23	7.32	3222.63	7.35	32.90
22-Jul-23 00:00:00	51.19	7.27	3224.16	7.42	32.90
22-Jul-23 01:00:00	51.22	7.04	3225.69	7.42	32.89
22-Jul-23 02:00:00	51.14	6.99	3227.22	7.42	32.88
22-Jul-23 03:00:00	51.07	6.98	3228.75	7.42	32.87
22-Jul-23 04:00:00	51.00	6.70	3230.28	7.50	32.86
22-Jul-23 05:00:00	50.92	6.77	3231.81	7.50	32.85
23-Jul-23 11:00:00	51.69	6.93	3345.00	5.59	32.45
23-Jul-23 12:00:00	51.72	7.37	3345.00	5.59	32.35
23-Jul-23 13:00:00	51.57	7.43	3345.00	5.59	32.24
23-Jul-23 14:00:00	51.47	7.52	3345.00	5.59	32.16
23-Jul-23 15:00:00	51.38	7.53	3345.00	5.59	32.13
23-Jul-23 16:00:00	51.29	7.33	3345.00	5.59	32.11
23-Jul-23 17:00:00	51.20	7.24	3345.00	5.59	32.09
23-Jul-23 18:00:00	51.11	7.06	3345.00	5.59	32.06
23-Jul-23 19:00:00	51.02	6.96	3345.00	5.59	32.04
23-Jul-23 20:00:00	50.96	6.89	3300.00	5.97	32.01
26-Jul-23 04:00:00	51.91	7.38	3090.00	7.72	32.67
26-Jul-23 05:00:00	52.12	7.41	3090.00	7.72	32.68
26-Jul-23 06:00:00	52.02	7.46	3090.00	7.72	32.70
26-Jul-23 07:00:00	51.92	7.39	3090.00	7.72	32.71
26-Jul-23 08:00:00	51.74	7.25	3090.00	7.72	32.73
26-Jul-23 09:00:00	51.62	7.14	3090.00	7.72	32.74
26-Jul-23 10:00:00	51.51	7.12	3100.00	7.80	32.76
26-Jul-23 11:00:00	51.39	7.09	3120.00	7.91	32.77
26-Jul-23 12:00:00	51.28	7.07	3120.00	7.91	32.79

GBL CT Blowdown water parameter

Date	CT B/D Water Flow (T/Hr)	pH	Conduct. (uS/CM)	D.O. (mg/l)	CT B/D discharge Temp. (Deg C)
26-Jul-23 13:00:00	51.16	7.05	3200.00	7.98	32.82
26-Jul-23 14:00:00	51.05	7.03	3200.00	7.98	32.85
26-Jul-23 15:00:00	50.94	7.01	3200.00	7.98	32.87
26-Jul-23 16:00:00	50.82	7.00	3200.00	7.98	32.90
29-Jul-23 05:00:00	52.79	7.08	3440.00	12.30	32.84
29-Jul-23 06:00:00	52.63	7.05	3440.00	12.30	32.77
30-Jul-23 00:00:00	52.90	7.05	3177.00	12.30	32.75
30-Jul-23 01:00:00	52.74	7.07	3177.00	12.30	32.75
30-Jul-23 02:00:00	52.63	7.09	3177.00	12.30	32.76
30-Jul-23 03:00:00	52.52	7.16	3177.00	12.30	32.77
30-Jul-23 04:00:00	52.41	7.33	3177.00	12.30	32.78
30-Jul-23 05:00:00	52.34	7.45	3177.00	12.30	32.79
30-Jul-23 06:00:00	52.29	7.45	3177.00	12.30	32.80
31-Jul-23 09:00:00	52.04	7.38	3345.00	6.32	33.08
31-Jul-23 10:00:00	51.92	7.49	3345.00	6.32	33.04
31-Jul-23 11:00:00	51.81	7.45	3345.00	6.32	32.99
31-Jul-23 12:00:00	51.69	7.02	3345.00	6.32	32.97
31-Jul-23 13:00:00	51.57	6.87	3345.00	6.32	32.97
31-Jul-23 14:00:00	51.46	6.82	3345.00	6.32	32.96
31-Jul-23 15:00:00	51.34	6.81	3345.00	6.32	32.95
31-Jul-23 16:00:00	51.22	6.79	3345.00	6.32	32.95
31-Jul-23 17:00:00	51.12	6.81	3345.88	6.32	32.94
31-Jul-23 18:00:00	51.04	6.86	3347.17	6.32	32.93
31-Jul-23 19:00:00	50.96	6.92	3348.45	6.32	32.93
31-Jul-23 20:00:00	50.88	7.05	3349.73	6.95	32.84
02-Aug-23 11:00:00	51.54	6.94	3318.00	6.41	32.99
02-Aug-23 12:00:00	51.45	6.84	3318.00	6.41	32.96
02-Aug-23 13:00:00	51.34	6.83	3318.00	6.41	32.93
02-Aug-23 14:00:00	51.24	6.84	3318.00	6.41	32.90
02-Aug-23 15:00:00	51.13	6.85	3318.00	6.41	32.86
02-Aug-23 16:00:00	51.03	6.94	3318.00	6.41	32.83
05-Aug-23 01:00:00	52.02	7.11	3317.00	5.90	32.68
05-Aug-23 02:00:00	51.93	7.12	3317.00	5.90	32.58
05-Aug-23 03:00:00	51.82	7.17	3317.00	5.90	32.48
05-Aug-23 04:00:00	51.67	7.15	3317.00	5.90	32.37
05-Aug-23 05:00:00	51.55	7.17	3317.00	5.90	32.27
05-Aug-23 23:00:00	51.94	7.09	3248.00	5.74	32.29
06-Aug-23 00:00:00	51.82	7.07	3248.00	5.74	32.29
06-Aug-23 01:00:00	51.70	7.05	3248.00	5.74	32.26
06-Aug-23 02:00:00	51.50	7.07	3248.00	5.74	32.22
06-Aug-23 03:00:00	51.31	7.09	3248.00	5.74	32.19
06-Aug-23 04:00:00	51.18	7.25	3248.00	5.74	32.16
06-Aug-23 05:00:00	51.11	7.26	3248.00	5.74	32.12
06-Aug-23 06:00:00	51.05	7.27	3248.00	5.74	32.09
08-Aug-23 19:00:00	52.27	7.12	3125.00	12.50	31.68
08-Aug-23 20:00:00	52.97	7.05	3125.00	12.50	31.73
08-Aug-23 21:00:00	52.88	7.02	3125.00	12.50	31.78
08-Aug-23 22:00:00	52.78	6.98	3125.00	12.50	31.84

GBL CT Blowdown water parameter

Date	CT B/D Water Flow (T/Hr)	pH	Conduct. (uS/CM)	D.O. (mg/l)	CT B/D discharge Temp. (Deg C)
08-Aug-23 23:00:00	52.68	6.99	3125.00	12.50	31.89
09-Aug-23 00:00:00	52.60	6.99	3125.00	12.50	31.92
09-Aug-23 01:00:00	52.54	6.95	3125.00	12.50	31.88
09-Aug-23 02:00:00	52.39	6.91	3125.00	12.50	31.85
09-Aug-23 03:00:00	52.25	6.83	3125.00	12.50	31.81
09-Aug-23 04:00:00	52.10	6.84	3125.00	12.50	31.77
09-Aug-23 05:00:00	51.96	6.85	3125.00	12.50	31.74
10-Aug-23 12:00:00	46.42	6.65	3247.00	6.50	31.68
10-Aug-23 13:00:00	51.77	6.63	3247.00	6.50	31.76
10-Aug-23 14:00:00	51.70	6.61	3247.00	6.50	31.85
10-Aug-23 15:00:00	51.63	6.58	3247.00	6.50	31.94
11-Aug-23 00:00:00	51.87	6.90	3322.00	7.62	32.23
11-Aug-23 01:00:00	51.78	6.92	3322.00	7.62	32.15
11-Aug-23 02:00:00	51.70	6.94	3322.00	7.62	32.08
11-Aug-23 03:00:00	51.62	6.94	3322.00	7.62	32.00
11-Aug-23 04:00:00	51.54	6.91	3322.00	7.62	31.93
11-Aug-23 05:00:00	51.46	6.89	3162.00	7.74	31.86
11-Aug-23 06:00:00	51.41	6.87	3162.00	7.74	31.78
11-Aug-23 18:00:00	52.25	6.60	3080.00	6.04	31.95
11-Aug-23 19:00:00	52.14	6.62	3080.00	6.04	31.93
11-Aug-23 20:00:00	52.03	6.71	3080.00	6.04	31.91
11-Aug-23 21:00:00	51.92	6.79	3080.00	6.04	31.89
11-Aug-23 22:00:00	51.81	6.88	3080.00	6.04	31.87
11-Aug-23 23:00:00	51.70	6.90	3080.00	6.04	31.86
12-Aug-23 00:00:00	51.59	6.92	3080.00	6.04	31.82
13-Aug-23 01:00:00	50.73	6.82	2598.00	6.13	31.20
16-Aug-23 08:00:00	53.04	6.80	3012.00	6.35	31.02
16-Aug-23 09:00:00	52.96	6.72	3012.00	6.35	31.07
16-Aug-23 10:00:00	52.81	6.63	3012.00	6.35	31.12
16-Aug-23 11:00:00	52.72	6.60	3012.00	6.35	31.17
16-Aug-23 12:00:00	52.63	6.59	3012.00	6.35	31.22
16-Aug-23 13:00:00	52.55	6.59	3012.00	6.35	31.27
16-Aug-23 14:00:00	52.48	6.58	3012.00	6.35	31.32
16-Aug-23 15:00:00	52.40	6.57	3012.00	6.35	31.37
16-Aug-23 16:00:00	52.32	6.78	3012.00	6.35	31.46
16-Aug-23 17:00:00	52.18	7.36	3012.00	6.35	31.56
18-Aug-23 11:00:00	51.58	7.44	3421.00	5.32	32.09
18-Aug-23 12:00:00	51.73	7.42	3421.00	5.32	32.00
18-Aug-23 13:00:00	51.61	7.39	3421.00	5.32	31.97
18-Aug-23 14:00:00	51.49	7.35	3421.00	5.32	31.98
18-Aug-23 15:00:00	51.38	7.31	3421.00	5.32	31.99
18-Aug-23 16:00:00	51.26	7.36	3421.00	5.32	32.00
18-Aug-23 17:00:00	51.14	7.38	3421.00	5.32	32.07
18-Aug-23 18:00:00	51.06	7.41	3421.00	5.32	32.18
18-Aug-23 19:00:00	50.97	7.51	3421.00	5.32	32.28
20-Aug-23 01:00:00	52.48	6.92	3221.00	6.80	32.85
20-Aug-23 02:00:00	53.05	6.92	3221.00	6.80	32.76
20-Aug-23 03:00:00	53.07	6.96	3300.00	7.10	32.67

GBL CT Blowdown water parameter

Date	CT B/D Water Flow (T/Hr)	pH	Conduct. (uS/CM)	D.O. (mg/l)	CT B/D discharge Temp. (Deg C)
20-Aug-23 04:00:00	52.96	7.01	3300.00	7.10	32.59
20-Aug-23 05:00:00	52.84	7.03	3300.00	7.10	32.50
20-Aug-23 06:00:00	52.72	7.04	3350.00	7.32	32.41
20-Aug-23 07:00:00	52.60	7.06	3365.00	7.42	32.32
20-Aug-23 08:00:00	51.80	7.12	3365.00	7.42	32.22
20-Aug-23 09:00:00	51.63	7.30	3365.00	7.42	32.15
20-Aug-23 10:00:00	51.46	7.43	3365.00	7.42	32.08
20-Aug-23 11:00:00	51.29	7.48	3365.00	7.42	32.01
20-Aug-23 12:00:00	51.20	7.52	3365.00	7.42	31.94
20-Aug-23 13:00:00	51.15	7.58	3365.00	7.42	31.88
20-Aug-23 14:00:00	51.11	7.59	3365.00	7.42	31.81
20-Aug-23 15:00:00	51.08	7.62	3365.00	7.42	31.74
20-Aug-23 16:00:00	51.04	7.60	3365.00	7.42	31.71
20-Aug-23 17:00:00	51.00	7.56	3365.00	7.42	31.68
22-Aug-23 13:00:00	52.43	7.59	2896.00	7.58	32.23
22-Aug-23 14:00:00	52.50	7.55	2896.00	7.58	32.18
22-Aug-23 15:00:00	52.41	7.51	2896.00	7.58	32.18
22-Aug-23 16:00:00	52.31	7.52	2896.00	7.58	32.17
22-Aug-23 17:00:00	52.16	7.52	2896.00	7.58	32.17
22-Aug-23 18:00:00	51.95	7.55	2896.00	7.58	32.17
22-Aug-23 19:00:00	51.86	7.52	2896.00	7.58	32.17
22-Aug-23 20:00:00	51.83	6.95	2896.00	7.58	32.17
22-Aug-23 21:00:00	51.80	6.83	2896.00	7.58	32.17
22-Aug-23 22:00:00	51.68	6.74	2896.00	7.58	32.16
22-Aug-23 23:00:00	51.47	6.72	2896.00	7.58	32.15
23-Aug-23 00:00:00	51.37	6.73	2896.00	7.58	32.13
23-Aug-23 01:00:00	51.26	6.74	2896.00	7.58	32.12
23-Aug-23 02:00:00	50.99	6.75	2896.00	7.58	32.11
23-Aug-23 03:00:00	50.85	6.75	2896.00	7.58	32.09
23-Aug-23 04:00:00	50.72	6.69	2896.00	7.58	32.08
23-Aug-23 05:00:00	50.59	6.61	2896.00	7.58	32.07
23-Aug-23 06:00:00	50.45	6.66	2896.00	7.58	32.01
23-Aug-23 07:00:00	50.32	6.67	2896.00	7.58	31.95
27-Aug-23 17:00:00	52.90	7.28	3020.00	7.71	30.20
27-Aug-23 18:00:00	52.73	7.33	3020.00	7.71	30.20
27-Aug-23 19:00:00	52.65	7.29	3020.00	7.71	30.20
27-Aug-23 20:00:00	52.52	7.23	3110.00	7.87	32.90
27-Aug-23 21:00:00	52.38	7.16	3200.00	7.95	32.91
27-Aug-23 22:00:00	52.25	7.06	3200.00	7.95	32.91
27-Aug-23 23:00:00	52.10	6.95	3200.00	7.95	32.92
28-Aug-23 00:00:00	52.05	6.97	3200.00	7.95	32.93
28-Aug-23 01:00:00	52.00	6.97	3300.00	8.10	32.94
28-Aug-23 02:00:00	51.93	6.97	3300.00	8.10	32.94
28-Aug-23 03:00:00	51.85	6.97	3300.00	8.10	32.95
28-Aug-23 04:00:00	51.77	6.98	3300.00	8.10	32.96
28-Aug-23 05:00:00	51.70	6.99	3300.00	8.10	32.97
28-Aug-23 06:00:00	51.55	7.00	3300.00	8.10	32.98
28-Aug-23 07:00:00	51.41	7.02	3339.00	8.51	32.98

GBL CT Blowdown water parameter

Date	CT B/D Water Flow (T/Hr)	pH	Conduct. (uS/CM)	D.O. (mg/l)	CT B/D discharge Temp. (Deg C)
28-Aug-23 08:00:00	51.32	7.10	3339.00	8.51	32.99
28-Aug-23 09:00:00	51.20	7.25	3339.00	8.51	33.00
28-Aug-23 10:00:00	51.01	7.37	3339.00	8.51	33.01
31-Aug-23 09:00:00	52.79	7.20	3232.00	10.20	33.31
31-Aug-23 10:00:00	52.55	7.69	3232.00	10.20	33.33
31-Aug-23 11:00:00	52.38	7.83	3232.00	10.20	33.34
31-Aug-23 12:00:00	52.22	7.89	3232.00	10.20	33.36
31-Aug-23 13:00:00	52.09	7.86	3232.00	10.20	33.33
31-Aug-23 14:00:00	51.96	7.82	3232.00	10.20	33.28
31-Aug-23 15:00:00	51.87	7.81	3232.00	10.20	33.24
31-Aug-23 16:00:00	51.83	7.80	3232.00	10.20	33.19
31-Aug-23 17:00:00	51.80	7.69	3232.00	10.20	33.14
02-Sep-23 11:00:00	53.04	7.73	3201.00	7.45	32.00
02-Sep-23 12:00:00	52.83	7.72	3220.00	7.50	33.00
02-Sep-23 13:00:00	52.77	7.71	3220.00	7.50	33.00
02-Sep-23 14:00:00	52.72	7.70	3300.00	7.55	33.18
02-Sep-23 15:00:00	52.66	7.70	3331.00	7.61	33.15
02-Sep-23 16:00:00	52.61	7.68	3331.00	7.61	33.11
02-Sep-23 17:00:00	52.49	7.67	3345.00	7.71	32.45
02-Sep-23 18:00:00	52.35	7.65	3345.00	7.71	32.45
03-Sep-23 01:00:00	52.18	7.31	3292.00	7.84	32.00
03-Sep-23 02:00:00	52.09	7.34	3292.00	7.84	32.00
03-Sep-23 03:00:00	52.02	7.38	3292.00	7.84	32.00
03-Sep-23 04:00:00	51.94	7.42	3292.00	7.84	32.00
03-Sep-23 05:00:00	51.87	7.47	3292.00	7.84	32.00
03-Sep-23 06:00:00	51.80	7.54	3292.00	7.84	32.00
05-Sep-23 20:00:00	52.91	7.68	3030.00	10.20	32.25
05-Sep-23 21:00:00	52.76	7.64	3030.00	10.20	32.25
05-Sep-23 22:00:00	52.62	7.63	3030.00	10.20	32.24
06-Sep-23 11:00:00	52.54	7.70	3028.00	6.74	32.16
06-Sep-23 12:00:00	52.45	7.69	3028.00	6.74	32.20
06-Sep-23 13:00:00	52.36	7.68	3028.00	6.74	32.24
06-Sep-23 14:00:00	52.27	7.67	3028.00	6.74	32.29
06-Sep-23 15:00:00	52.17	7.67	3028.00	6.74	32.33
09-Sep-23 03:00:00	52.44	7.65	3022.60	7.23	32.13
09-Sep-23 04:00:00	52.93	7.66	3042.05	7.23	32.14
09-Sep-23 05:00:00	52.84	7.65	3046.94	7.23	32.14
09-Sep-23 06:00:00	52.73	7.64	3051.84	7.23	32.13
09-Sep-23 07:00:00	52.60	7.63	3056.73	7.23	32.12
09-Sep-23 08:00:00	52.47	7.62	3061.63	7.23	32.10
09-Sep-23 09:00:00	52.34	7.64	3059.75	7.23	32.08
09-Sep-23 10:00:00	52.20	7.65	3057.00	7.23	32.07
09-Sep-23 11:00:00	52.08	7.67	3054.24	7.23	32.10
09-Sep-23 12:00:00	51.97	7.67	3051.49	7.23	32.17
09-Sep-23 13:00:00	51.85	7.66	3048.73	7.23	32.23
09-Sep-23 14:00:00	51.73	7.65	3045.98	7.23	32.30
09-Sep-23 15:00:00	51.75	7.65	3043.22	7.23	32.36
09-Sep-23 16:00:00	51.56	7.64	3040.59	7.23	32.42

GBL CT Blowdown water parameter

Date	CT B/D Water Flow (T/Hr)	pH	Conduct. (uS/CM)	D.O. (mg/l)	CT B/D discharge Temp. (Deg C)
12-Sep-23 14:00:00	52.91	7.40	3101.87	6.82	31.84
12-Sep-23 15:00:00	52.81	7.40	3114.90	7.02	31.88
12-Sep-23 16:00:00	52.72	7.40	3121.46	7.02	31.92
12-Sep-23 17:00:00	52.62	7.43	3121.52	7.55	31.97
12-Sep-23 18:00:00	52.52	7.50	3121.59	7.55	32.01
12-Sep-23 19:00:00	52.42	7.54	3121.66	7.60	32.04
12-Sep-23 20:00:00	52.32	7.58	3121.72	7.71	32.05
12-Sep-23 21:00:00	52.22	7.62	3121.79	7.71	32.06
12-Sep-23 22:00:00	52.09	7.61	3120.09	7.71	32.08
12-Sep-23 23:00:00	52.02	7.60	3117.46	7.71	32.09
13-Sep-23 00:00:00	51.92	7.61	3114.83	7.71	32.11
13-Sep-23 01:00:00	51.82	7.63	3112.20	7.71	32.12
13-Sep-23 02:00:00	51.71	7.65	3109.57	7.71	32.13
13-Sep-23 03:00:00	51.61	7.66	3106.94	7.71	32.04
13-Sep-23 04:00:00	51.50	7.68	3104.94	7.71	31.96
13-Sep-23 05:00:00	51.39	7.68	3106.59	7.71	31.87
13-Sep-23 06:00:00	51.27	7.69	3108.25	7.71	31.78
13-Sep-23 07:00:00	51.16	7.69	3109.90	7.71	31.69
16-Sep-23 10:00:00	52.17	7.57	3115.37	5.80	32.54
16-Sep-23 11:00:00	52.15	7.61	3134.07	5.80	32.47
16-Sep-23 12:00:00	52.03	7.65	3138.42	5.80	32.49
16-Sep-23 13:00:00	52.72	7.64	3112.95	5.80	32.52
16-Sep-23 14:00:00	52.56	7.65	3113.47	5.80	32.50
16-Sep-23 15:00:00	52.40	7.60	3113.92	5.80	32.48
16-Sep-23 16:00:00	52.28	7.51	3109.08	5.80	32.46
16-Sep-23 17:00:00	52.17	7.51	3104.24	5.80	32.44
16-Sep-23 18:00:00	52.08	7.57	3099.41	5.80	32.41
16-Sep-23 19:00:00	52.05	7.58	3098.91	5.80	32.38
16-Sep-23 20:00:00	51.93	7.58	3098.99	5.80	32.34
16-Sep-23 21:00:00	51.72	7.59	3099.07	5.80	32.31
16-Sep-23 22:00:00	51.58	7.57	3099.15	6.32	32.29
16-Sep-23 23:00:00	51.48	7.51	3099.23	6.32	32.28
17-Sep-23 00:00:00	51.39	7.47	3099.31	6.32	32.27
17-Sep-23 01:00:00	51.30	7.42	3099.39	6.32	32.26
17-Sep-23 02:00:00	51.21	7.41	3099.50	6.32	32.25
20-Sep-23 10:00:00	52.66	7.50	2997.55	7.45	32.00
20-Sep-23 11:00:00	52.76	7.60	3020.30	7.50	32.40
20-Sep-23 12:00:00	52.71	7.60	3031.08	7.50	32.40
20-Sep-23 13:00:00	52.57	7.60	3035.75	7.50	32.40
20-Sep-23 14:00:00	52.47	7.60	3036.53	7.50	32.40
20-Sep-23 15:00:00	52.39	7.60	3037.31	7.50	32.40
20-Sep-23 16:00:00	52.30	7.68	3038.09	7.62	32.64
20-Sep-23 17:00:00	52.22	7.72	3038.86	7.79	31.00
20-Sep-23 18:00:00	52.11	7.81	3039.64	7.88	30.00
20-Sep-23 19:00:00	51.94	7.81	3040.42	7.88	30.00
20-Sep-23 20:00:00	51.78	7.81	3041.19	7.88	30.00
20-Sep-23 21:00:00	51.62	7.81	3042.06	7.88	30.00
20-Sep-23 22:00:00	51.46	7.81	3042.99	7.88	30.00

GBL CT Blowdown water parameter

Date	CT B/D Water Flow (T/Hr)	pH	Conduct. (uS/CM)	D.O. (mg/l)	CT B/D discharge Temp. (Deg C)
20-Sep-23 23:00:00	51.32	7.81	3043.91	7.88	30.00
21-Sep-23 00:00:00	51.24	7.81	3044.83	7.88	30.00
21-Sep-23 01:00:00	51.17	7.81	3045.75	7.88	30.00
23-Sep-23 22:00:00	51.40	8.31	3040.41	11.60	33.21
23-Sep-23 23:00:00	51.81	8.23	3044.48	11.60	33.13
24-Sep-23 00:00:00	51.66	8.20	3048.55	11.60	33.05
24-Sep-23 01:00:00	51.55	8.20	3052.41	11.60	33.06
24-Sep-23 02:00:00	51.39	8.06	3051.59	11.60	33.06
24-Sep-23 03:00:00	51.22	7.98	3050.77	11.60	33.07
24-Sep-23 04:00:00	51.05	7.91	3049.94	11.60	33.08
24-Sep-23 05:00:00	50.89	7.86	3049.12	11.60	33.08
24-Sep-23 06:00:00	50.91	7.80	3048.29	11.60	33.09
26-Sep-23 12:00:00	52.27	7.38	3160.13	5.90	33.31
26-Sep-23 13:00:00	52.17	7.39	3167.29	5.90	33.31
26-Sep-23 14:00:00	52.05	7.41	3169.68	5.90	33.31
26-Sep-23 15:00:00	51.93	7.43	3172.06	5.90	33.31
26-Sep-23 16:00:00	51.87	7.44	3174.45	5.90	33.30
26-Sep-23 17:00:00	51.76	7.46	3176.84	5.90	33.30
26-Sep-23 18:00:00	51.63	7.47	3179.22	5.90	33.30
26-Sep-23 19:00:00	51.50	7.49	3181.61	5.90	33.30
26-Sep-23 20:00:00	51.37	7.49	3183.99	5.90	33.29
26-Sep-23 21:00:00	51.24	7.50	3185.22	5.90	33.26
26-Sep-23 22:00:00	51.11	7.51	3186.26	6.11	33.24
26-Sep-23 23:00:00	51.03	7.52	3187.29	6.11	33.21
30-Sep-23 06:00:00	52.45	7.75	3135.33	7.55	33.16
30-Sep-23 07:00:00	52.94	7.85	3201.20	7.61	33.17
30-Sep-23 08:00:00	52.75	7.85	3200.57	7.61	33.18
30-Sep-23 09:00:00	52.64	7.85	3199.93	7.61	33.19
30-Sep-23 10:00:00	52.57	7.85	3194.53	7.61	33.20
30-Sep-23 11:00:00	52.51	7.85	3188.72	7.61	33.21
30-Sep-23 12:00:00	52.44	7.85	3182.91	7.61	33.22
30-Sep-23 13:00:00	52.25	7.85	3177.09	7.61	33.23
30-Sep-23 14:00:00	52.06	7.85	3171.28	7.61	33.24
30-Sep-23 15:00:00	51.88	7.85	3165.47	7.61	33.22
30-Sep-23 16:00:00	51.70	7.85	3159.65	7.61	33.20
30-Sep-23 17:00:00	51.77	7.85	3153.84	7.61	33.18
30-Sep-23 18:00:00	51.75	7.85	3154.78	7.61	33.17
30-Sep-23 19:00:00	51.58	7.85	3156.20	7.61	33.15
30-Sep-23 20:00:00	51.41	7.85	3157.61	7.61	33.13
30-Sep-23 21:00:00	51.24	7.85	3159.03	7.61	33.11
30-Sep-23 22:00:00	51.08	7.92	3160.44	7.77	33.07
03-Oct-23 11:00:00	52.44	7.43	2999.26	6.60	33.00
03-Oct-23 12:00:00	52.20	7.39	3024.45	6.60	33.00
03-Oct-23 13:00:00	52.08	7.38	3034.70	6.60	33.00
03-Oct-23 14:00:00	52.02	7.39	3035.43	6.60	33.00
03-Oct-23 15:00:00	51.95	7.40	3036.15	6.60	33.00
03-Oct-23 16:00:00	51.87	7.41	3036.88	6.60	33.00
03-Oct-23 17:00:00	51.65	7.42	3037.60	6.60	33.00

GBL CT Blowdown water parameter

Date	CT B/D Water Flow (T/Hr)	pH	Conduct. (uS/CM)	D.O. (mg/l)	CT B/D discharge Temp. (Deg C)
03-Oct-23 18:00:00	51.55	7.43	3038.33	6.60	33.00
03-Oct-23 19:00:00	51.46	7.44	3039.05	6.60	33.00
03-Oct-23 20:00:00	51.37	7.45	3039.78	6.75	32.00
03-Oct-23 21:00:00	51.26	7.46	3039.95	7.10	31.00
03-Oct-23 22:00:00	51.16	7.47	3039.91	7.25	30.00
03-Oct-23 23:00:00	12.13	7.48	3039.86	7.25	30.88
08-Oct-23 18:00:00	52.63	7.32	3056.85	10.30	32.27
08-Oct-23 19:00:00	51.90	7.28	3022.96	10.30	32.20
09-Oct-23 04:00:00	52.62	7.38	3063.72	6.92	32.19
09-Oct-23 05:00:00	52.77	7.34	3063.47	6.92	32.20
09-Oct-23 06:00:00	52.64	7.33	3063.23	6.92	32.22
09-Oct-23 07:00:00	52.56	7.33	3062.98	6.92	32.23
09-Oct-23 08:00:00	52.37	7.32	3062.73	7.23	32.25
09-Oct-23 09:00:00	52.16	7.31	3062.49	7.55	32.26
09-Oct-23 10:00:00	51.99	7.31	3062.24	7.62	32.28
09-Oct-23 11:00:00	51.82	7.30	3061.99	7.62	32.29
09-Oct-23 12:00:00	51.78	7.29	3061.83	7.70	32.30
09-Oct-23 13:00:00	51.63	7.29	3061.76	7.70	32.29
09-Oct-23 14:00:00	51.47	7.30	3061.68	7.70	32.28
09-Oct-23 15:00:00	51.32	7.30	3061.61	7.70	32.27
09-Oct-23 16:00:00	51.16	7.30	3061.54	7.70	32.25
09-Oct-23 17:00:00	51.01	7.30	3061.47	7.70	32.24
09-Oct-23 18:00:00	51.04	7.30	3061.39	7.70	32.23
09-Oct-23 19:00:00	50.97	7.31	3061.32	7.70	32.22
14-Oct-23 08:00:00	51.07	8.09	3116.60	11.20	33.01
14-Oct-23 09:00:00	51.75	7.88	3154.23	11.20	32.96
14-Oct-23 10:00:00	51.65	7.83	3163.97	11.20	32.91
14-Oct-23 11:00:00	51.55	7.78	3163.34	11.20	32.88
14-Oct-23 12:00:00	51.45	7.77	3162.70	11.20	32.91
15-Oct-23 11:00:00	52.50	7.83	3122.52	6.78	33.16
15-Oct-23 12:00:00	52.62	7.74	3151.11	6.78	32.94
15-Oct-23 13:00:00	52.59	7.70	3161.02	6.78	32.92
15-Oct-23 14:00:00	52.55	7.68	3159.33	6.78	32.91
15-Oct-23 15:00:00	52.40	7.67	3157.64	6.78	32.89
15-Oct-23 16:00:00	52.25	7.65	3155.96	6.78	32.87
15-Oct-23 17:00:00	52.11	7.64	3154.27	6.78	32.86
15-Oct-23 18:00:00	51.98	7.65	3152.58	6.78	32.84
15-Oct-23 19:00:00	51.87	7.65	3150.90	6.78	32.82
15-Oct-23 20:00:00	51.83	7.66	3149.21	6.78	32.81
15-Oct-23 21:00:00	51.75	7.65	3148.44	6.78	32.80
15-Oct-23 22:00:00	51.62	7.65	3148.43	6.78	32.79
15-Oct-23 23:00:00	51.49	7.64	3148.43	7.23	32.78
18-Oct-23 11:00:00	52.22	7.76	3080.33	11.60	33.06
18-Oct-23 12:00:00	52.25	7.75	3109.83	11.60	33.05
18-Oct-23 13:00:00	51.99	7.74	3110.06	11.60	33.04
18-Oct-23 14:00:00	51.96	7.72	3110.30	11.60	33.03
18-Oct-23 15:00:00	51.94	7.72	3110.53	11.60	33.02
18-Oct-23 16:00:00	51.81	7.72	3110.77	11.60	33.00

GBL CT Blowdown water parameter

Date	CT B/D Water Flow (T/Hr)	pH	Conduct. (uS/CM)	D.O. (mg/l)	CT B/D discharge Temp. (Deg C)
18-Oct-23 17:00:00	51.68	7.73	3111.00	11.60	32.99
18-Oct-23 18:00:00	51.56	7.73	3111.24	11.60	32.98
18-Oct-23 19:00:00	51.44	7.73	3111.47	11.60	32.96
18-Oct-23 20:00:00	51.32	7.71	3112.13	11.60	32.93
18-Oct-23 21:00:00	51.20	7.70	3113.59	11.60	32.90
18-Oct-23 22:00:00	51.08	7.69	3115.05	11.60	32.86
18-Oct-23 23:00:00	50.96	7.68	3116.51	11.60	32.83
21-Oct-23 20:00:00	52.60	7.96	3056.37	10.50	33.20
21-Oct-23 21:00:00	52.42	7.91	3080.17	10.50	33.18
21-Oct-23 22:00:00	52.31	7.88	3081.29	10.50	33.16
21-Oct-23 23:00:00	52.20	7.87	3082.42	10.50	33.13
22-Oct-23 00:00:00	52.09	7.87	3083.55	10.50	33.11
22-Oct-23 01:00:00	51.98	7.86	3084.68	10.50	33.08
22-Oct-23 02:00:00	51.87	7.87	3085.80	10.50	33.02
24-Oct-23 09:00:00	51.43	7.82	2957.36	6.37	32.42
24-Oct-23 10:00:00	49.23	7.79	2990.59	6.37	32.53
24-Oct-23 11:00:00	49.17	7.80	2997.08	6.37	32.60
24-Oct-23 12:00:00	48.93	7.80	2996.67	6.37	32.63
24-Oct-23 13:00:00	48.88	7.81	2996.25	6.37	32.66
24-Oct-23 14:00:00	48.83	7.81	2995.84	6.37	32.69
24-Oct-23 15:00:00	48.64	7.82	2995.43	6.37	32.72
25-Oct-23 15:00:00	51.86	7.62	2873.84	11.00	32.86
25-Oct-23 16:00:00	51.76	7.58	2895.60	11.00	32.74
25-Oct-23 17:00:00	51.65	7.57	2906.17	11.00	32.72
25-Oct-23 18:00:00	51.57	7.56	2908.28	11.00	32.70
25-Oct-23 19:00:00	51.49	7.55	2910.39	11.00	32.67
25-Oct-23 20:00:00	51.39	7.54	2912.50	11.30	32.65
29-Oct-23 02:00:00	51.63	7.68	2863.15	5.70	33.26
29-Oct-23 03:00:00	51.69	7.66	2896.91	5.70	33.31
29-Oct-23 04:00:00	51.59	7.65	2908.15	5.70	33.36
29-Oct-23 05:00:00	51.40	7.64	2911.21	5.70	33.42
29-Oct-23 06:00:00	52.38	7.66	2909.77	5.70	33.41
29-Oct-23 07:00:00	52.25	7.68	2908.12	5.70	33.41
29-Oct-23 08:00:00	52.12	7.69	2906.46	5.80	33.40
29-Oct-23 09:00:00	51.99	7.69	2904.80	5.80	33.39
29-Oct-23 10:00:00	51.85	7.69	2903.14	5.80	33.39
29-Oct-23 11:00:00	51.73	7.70	2901.49	6.10	33.38
29-Oct-23 12:00:00	51.60	7.70	2899.83	6.34	33.37
29-Oct-23 13:00:00	51.48	7.70	2898.22	6.34	33.35
29-Oct-23 14:00:00	51.36	7.71	2897.27	6.52	33.34
29-Oct-23 15:00:00	51.26	7.71	2896.32	6.52	33.32
29-Oct-23 16:00:00	51.16	7.71	2895.37	6.52	33.31
29-Oct-23 17:00:00	51.06	7.71	2894.42	6.52	33.29
08-Oct-23 18:00:00	52.63	7.32	3056.85	10.30	32.27
08-Oct-23 19:00:00	51.90	7.28	3022.96	10.30	32.20
09-Oct-23 04:00:00	52.62	7.38	3063.72	6.92	32.19
09-Oct-23 05:00:00	52.77	7.34	3063.47	6.92	32.20
09-Oct-23 06:00:00	52.64	7.33	3063.23	6.92	32.22

GBL CT Blowdown water parameter

Date	CT B/D Water Flow (T/Hr)	pH	Conduct. (uS/CM)	D.O. (mg/l)	CT B/D discharge Temp. (Deg C)
09-Oct-23 07:00:00	52.56	7.33	3062.98	6.92	32.23
09-Oct-23 08:00:00	52.37	7.32	3062.73	7.23	32.25
09-Oct-23 09:00:00	52.16	7.31	3062.49	7.55	32.26
09-Oct-23 10:00:00	51.99	7.31	3062.24	7.62	32.28
09-Oct-23 11:00:00	51.82	7.30	3061.99	7.62	32.29
09-Oct-23 12:00:00	51.78	7.29	3061.83	7.70	32.30
09-Oct-23 13:00:00	51.63	7.29	3061.76	7.70	32.29
09-Oct-23 14:00:00	51.47	7.30	3061.68	7.70	32.28
09-Oct-23 15:00:00	51.32	7.30	3061.61	7.70	32.27
09-Oct-23 16:00:00	51.16	7.30	3061.54	7.70	32.25
09-Oct-23 17:00:00	51.01	7.30	3061.47	7.70	32.24
09-Oct-23 18:00:00	51.04	7.30	3061.39	7.70	32.23
09-Oct-23 19:00:00	50.97	7.31	3061.32	7.70	32.22
14-Oct-23 08:00:00	51.07	8.09	3116.60	11.20	33.01
14-Oct-23 09:00:00	51.75	7.88	3154.23	11.20	32.96
14-Oct-23 10:00:00	51.65	7.83	3163.97	11.20	32.91
14-Oct-23 11:00:00	51.55	7.78	3163.34	11.20	32.88
14-Oct-23 12:00:00	51.45	7.77	3162.70	11.20	32.91
15-Oct-23 11:00:00	52.50	7.83	3122.52	6.78	33.16
15-Oct-23 12:00:00	52.62	7.74	3151.11	6.78	32.94
15-Oct-23 13:00:00	52.59	7.70	3161.02	6.78	32.92
15-Oct-23 14:00:00	52.55	7.68	3159.33	6.78	32.91
15-Oct-23 15:00:00	52.40	7.67	3157.64	6.78	32.89
15-Oct-23 16:00:00	52.25	7.65	3155.96	6.78	32.87
15-Oct-23 17:00:00	52.11	7.64	3154.27	6.78	32.86
15-Oct-23 18:00:00	51.98	7.65	3152.58	6.78	32.84
15-Oct-23 19:00:00	51.87	7.65	3150.90	6.78	32.82
15-Oct-23 20:00:00	51.83	7.66	3149.21	6.78	32.81
15-Oct-23 21:00:00	51.75	7.65	3148.44	6.78	32.80
15-Oct-23 22:00:00	51.62	7.65	3148.43	6.78	32.79
15-Oct-23 23:00:00	51.49	7.64	3148.43	7.23	32.78
18-Oct-23 11:00:00	52.22	7.76	3080.33	11.60	33.06
18-Oct-23 12:00:00	52.25	7.75	3109.83	11.60	33.05
18-Oct-23 13:00:00	51.99	7.74	3110.06	11.60	33.04
18-Oct-23 14:00:00	51.96	7.72	3110.30	11.60	33.03
18-Oct-23 15:00:00	51.94	7.72	3110.53	11.60	33.02
18-Oct-23 16:00:00	51.81	7.72	3110.77	11.60	33.00
18-Oct-23 17:00:00	51.68	7.73	3111.00	11.60	32.99
18-Oct-23 18:00:00	51.56	7.73	3111.24	11.60	32.98
18-Oct-23 19:00:00	51.44	7.73	3111.47	11.60	32.96
18-Oct-23 20:00:00	51.32	7.71	3112.13	11.60	32.93
18-Oct-23 21:00:00	51.20	7.70	3113.59	11.60	32.90
18-Oct-23 22:00:00	51.08	7.69	3115.05	11.60	32.86
18-Oct-23 23:00:00	50.96	7.68	3116.51	11.60	32.83
21-Oct-23 20:00:00	52.60	7.96	3056.37	10.50	33.20
21-Oct-23 21:00:00	52.42	7.91	3080.17	10.50	33.18
21-Oct-23 22:00:00	52.31	7.88	3081.29	10.50	33.16
21-Oct-23 23:00:00	52.20	7.87	3082.42	10.50	33.13

GBL CT Blowdown water parameter

Date	CT B/D Water Flow (T/Hr)	pH	Conduct. (uS/CM)	D.O. (mg/l)	CT B/D discharge Temp. (Deg C)
22-Oct-23 00:00:00	52.09	7.87	3083.55	10.50	33.11
22-Oct-23 01:00:00	51.98	7.86	3084.68	10.50	33.08
22-Oct-23 02:00:00	51.87	7.87	3085.80	10.50	33.02
24-Oct-23 09:00:00	51.43	7.82	2957.36	6.37	32.42
24-Oct-23 10:00:00	49.23	7.79	2990.59	6.37	32.53
24-Oct-23 11:00:00	49.17	7.80	2997.08	6.37	32.60
24-Oct-23 12:00:00	48.93	7.80	2996.67	6.37	32.63
24-Oct-23 13:00:00	48.88	7.81	2996.25	6.37	32.66
24-Oct-23 14:00:00	48.83	7.81	2995.84	6.37	32.69
24-Oct-23 15:00:00	48.64	7.82	2995.43	6.37	32.72
25-Oct-23 15:00:00	51.86	7.62	2873.84	11.00	32.86
25-Oct-23 16:00:00	51.76	7.58	2895.60	11.00	32.74
25-Oct-23 17:00:00	51.65	7.57	2906.17	11.00	32.72
25-Oct-23 18:00:00	51.57	7.56	2908.28	11.00	32.70
25-Oct-23 19:00:00	51.49	7.55	2910.39	11.00	32.67
25-Oct-23 20:00:00	51.39	7.54	2912.50	11.30	32.65
29-Oct-23 02:00:00	51.63	7.68	2863.15	5.70	33.26
29-Oct-23 03:00:00	51.69	7.66	2896.91	5.70	33.31
29-Oct-23 04:00:00	51.59	7.65	2908.15	5.70	33.36
29-Oct-23 05:00:00	51.40	7.64	2911.21	5.70	33.42
29-Oct-23 06:00:00	52.38	7.66	2909.77	5.70	33.41
29-Oct-23 07:00:00	52.25	7.68	2908.12	5.70	33.41
29-Oct-23 08:00:00	52.12	7.69	2906.46	5.80	33.40
29-Oct-23 09:00:00	51.99	7.69	2904.80	5.80	33.39
29-Oct-23 10:00:00	51.85	7.69	2903.14	5.80	33.39
29-Oct-23 11:00:00	51.73	7.70	2901.49	6.10	33.38
29-Oct-23 12:00:00	51.60	7.70	2899.83	6.34	33.37
29-Oct-23 13:00:00	51.48	7.70	2898.22	6.34	33.35
29-Oct-23 14:00:00	51.36	7.71	2897.27	6.52	33.34
29-Oct-23 15:00:00	51.26	7.71	2896.32	6.52	33.32
29-Oct-23 16:00:00	51.16	7.71	2895.37	6.52	33.31
29-Oct-23 17:00:00	51.06	7.71	2894.42	6.52	33.29
02-Nov-23 09:00:00	52.28	7.78	2841.73	5.80	33.17
02-Nov-23 10:00:00	52.47	7.72	2860.73	5.80	33.01
02-Nov-23 11:00:00	52.35	7.72	2861.31	5.80	33.00
02-Nov-23 12:00:00	52.23	7.71	2861.88	5.80	32.99
02-Nov-23 13:00:00	52.11	7.71	2862.45	5.80	32.97
02-Nov-23 14:00:00	51.99	7.71	2863.02	5.80	32.96
02-Nov-23 15:00:00	51.87	7.71	2863.60	5.80	32.95
02-Nov-23 16:00:00	51.74	7.70	2864.17	5.80	32.93
02-Nov-23 17:00:00	51.62	7.70	2864.74	5.80	32.92
02-Nov-23 18:00:00	51.50	7.69	2865.65	5.80	32.89
02-Nov-23 19:00:00	51.38	7.68	2866.92	5.80	32.84
05-Nov-23 08:00:00	52.65	7.64	2860.87	7.23	33.32
05-Nov-23 09:00:00	52.42	7.63	2896.21	7.23	33.31
05-Nov-23 10:00:00	52.29	7.63	2907.25	7.23	33.31
05-Nov-23 11:00:00	52.16	7.63	2908.89	7.23	33.30
05-Nov-23 12:00:00	52.03	7.64	2910.54	7.23	33.30

GBL CT Blowdown water parameter

Date	CT B/D Water Flow (T/Hr)	pH	Conduct. (uS/CM)	D.O. (mg/l)	CT B/D discharge Temp. (Deg C)
05-Nov-23 13:00:00	51.90	7.64	2912.18	7.23	33.29
05-Nov-23 14:00:00	51.77	7.64	2913.82	7.23	33.29
05-Nov-23 15:00:00	51.70	7.64	2915.46	7.23	33.28
05-Nov-23 16:00:00	51.64	7.65	2917.10	7.23	33.24
05-Nov-23 17:00:00	51.57	7.64	2918.74	7.23	33.18
08-Nov-23 08:00:00	52.46	7.54	2895.60	7.25	33.47
08-Nov-23 09:00:00	52.45	7.53	2895.02	7.25	33.35
08-Nov-23 10:00:00	52.40	7.52	2894.45	7.25	33.35
08-Nov-23 11:00:00	52.34	7.51	2893.87	7.25	33.35
08-Nov-23 12:00:00	52.28	7.50	2893.30	7.25	33.35
08-Nov-23 13:00:00	52.22	7.50	2892.72	7.25	33.35
08-Nov-23 14:00:00	52.09	7.49	2892.24	7.25	33.35
08-Nov-23 15:00:00	51.93	7.49	2891.83	7.25	33.35
08-Nov-23 16:00:00	51.76	7.49	2891.41	7.25	33.35
08-Nov-23 17:00:00	51.61	7.48	2890.99	7.25	33.33
08-Nov-23 18:00:00	51.53	7.48	2890.58	7.25	33.30
08-Nov-23 19:00:00	51.46	7.47	2890.16	7.25	33.26
11-Nov-23 11:00:00	52.45	7.45	2831.99	7.80	33.64
11-Nov-23 12:00:00	52.38	7.44	2861.83	7.80	33.50
11-Nov-23 13:00:00	52.28	7.44	2872.83	7.80	33.42
11-Nov-23 14:00:00	52.16	7.44	2871.92	7.80	33.39
11-Nov-23 15:00:00	52.07	7.44	2871.01	7.80	33.36
11-Nov-23 16:00:00	51.98	7.44	2870.10	7.80	33.32
11-Nov-23 17:00:00	51.90	7.44	2866.70	7.80	33.30
11-Nov-23 18:00:00	51.82	7.44	2860.77	7.80	33.27
11-Nov-23 19:00:00	51.69	7.43	2863.06	7.80	33.25
11-Nov-23 20:00:00	51.54	7.42	2865.49	7.80	33.23
11-Nov-23 21:00:00	51.44	7.40	2867.92	7.80	33.20
15-Nov-23 10:00:00	52.55	7.64	2850.81	7.50	32.00
15-Nov-23 11:00:00	52.44	7.64	2887.32	7.62	32.00
15-Nov-23 12:00:00	52.36	7.63	2894.46	7.62	32.00
15-Nov-23 13:00:00	52.23	7.63	2899.24	7.70	32.21
15-Nov-23 14:00:00	52.09	7.63	2904.03	7.70	32.21
15-Nov-23 15:00:00	51.96	7.62	2906.37	7.81	32.50
15-Nov-23 16:00:00	51.84	7.62	2907.15	7.93	32.99
15-Nov-23 17:00:00	51.71	7.62	2907.93	7.93	32.97
15-Nov-23 18:00:00	51.59	7.62	2908.71	8.11	32.96
15-Nov-23 19:00:00	51.46	7.62	2909.50	8.11	32.94
15-Nov-23 20:00:00	51.37	7.59	2910.61	8.11	32.92
18-Nov-23 07:00:00	51.49	7.82	3060.59	10.60	30.36
18-Nov-23 08:00:00	51.71	7.79	3089.05	10.60	30.31
18-Nov-23 09:00:00	51.58	7.78	3099.98	10.60	30.18
18-Nov-23 10:00:00	51.45	7.76	3095.70	10.60	30.04
18-Nov-23 11:00:00	51.32	7.75	3091.42	10.60	29.91
18-Nov-23 12:00:00	51.19	7.74	3086.75	10.60	29.78
18-Nov-23 13:00:00	51.06	7.72	3070.89	10.60	29.64
18-Nov-23 14:00:00	50.93	7.71	3055.03	10.60	29.66
18-Nov-23 15:00:00	50.84	7.70	3039.17	10.60	29.77

GBL CT Blowdown water parameter

Date	CT B/D Water Flow (T/Hr)	pH	Conduct. (uS/CM)	D.O. (mg/l)	CT B/D discharge Temp. (Deg C)
18-Nov-23 16:00:00	50.73	7.68	3022.85	10.60	29.88
18-Nov-23 17:00:00	50.62	7.66	3006.13	9.45	29.99
18-Nov-23 18:00:00	50.58	7.64	2989.40	9.45	30.16
21-Nov-23 15:00:00	52.00	7.51	2961.23	6.90	28.42
21-Nov-23 16:00:00	51.96	7.51	2963.93	6.90	28.60
21-Nov-23 17:00:00	51.93	7.50	2966.63	6.90	28.79
21-Nov-23 18:00:00	51.89	7.50	2969.33	6.90	28.93
21-Nov-23 19:00:00	51.82	7.50	2972.04	6.90	29.05
21-Nov-23 20:00:00	51.71	7.50	2970.01	6.90	29.17
21-Nov-23 21:00:00	51.56	7.50	2966.17	6.90	29.30
21-Nov-23 22:00:00	51.41	7.50	2962.32	7.25	29.42
21-Nov-23 23:00:00	51.26	7.50	2958.48	7.25	29.54
22-Nov-23 00:00:00	51.16	7.50	2954.64	7.25	29.66
22-Nov-23 01:00:00	51.05	7.50	2950.79	7.25	29.69
22-Nov-23 02:00:00	50.88	7.50	2946.95	7.25	29.66
22-Nov-23 03:00:00	50.85	7.50	2946.55	7.25	29.64
26-Nov-23 14:00:00	51.98	7.52	3010.01	6.23	32.10
26-Nov-23 15:00:00	52.39	7.53	3102.23	6.23	32.10
26-Nov-23 16:00:00	52.27	7.53	3132.78	6.23	32.10
26-Nov-23 17:00:00	52.16	7.52	3146.06	6.23	32.10
26-Nov-23 18:00:00	52.05	7.52	3149.98	6.23	32.10
26-Nov-23 19:00:00	51.94	7.52	3143.88	6.23	32.10
26-Nov-23 20:00:00	51.82	7.52	3137.78	6.55	28.83
26-Nov-23 21:00:00	51.72	7.52	3131.68	6.55	28.84
26-Nov-23 22:00:00	51.62	7.51	3125.58	6.55	28.85
26-Nov-23 23:00:00	51.52	7.52	3119.48	6.55	28.86
27-Nov-23 00:00:00	51.43	7.52	3113.38	6.55	28.87
27-Nov-23 01:00:00	51.33	7.52	3107.28	6.55	28.88
27-Nov-23 02:00:00	51.23	7.52	3097.58	6.55	28.89
27-Nov-23 03:00:00	51.22	7.52	3085.90	6.55	28.90
27-Nov-23 04:00:00	51.12	7.52	3074.21	6.55	28.88
27-Nov-23 05:00:00	50.90	7.52	3062.53	6.55	28.87
27-Nov-23 06:00:00	50.84	7.52	3050.84	6.55	28.86
27-Nov-23 07:00:00	50.78	7.51	3039.16	6.55	28.85
02-Dec-23 08:00:00	52.24	7.72	3150.77	6.30	29.72
02-Dec-23 09:00:00	52.28	7.70	3181.39	6.30	29.65
02-Dec-23 10:00:00	52.20	7.68	3187.64	6.30	29.57
02-Dec-23 11:00:00	52.10	7.67	3193.89	6.30	29.50
02-Dec-23 12:00:00	52.00	7.67	3192.89	6.30	29.51
02-Dec-23 13:00:00	51.90	7.66	3187.18	6.30	29.53
02-Dec-23 14:00:00	51.83	7.65	3181.48	6.30	29.56
02-Dec-23 15:00:00	51.95	7.65	3175.77	6.30	29.59
02-Dec-23 16:00:00	51.74	7.64	3170.07	6.30	29.67
02-Dec-23 17:00:00	2.92	7.44	3167.61	6.30	32.90
04-Dec-23 04:00:00	52.45	7.70	3075.99	7.76	29.30
04-Dec-23 05:00:00	52.52	7.68	3123.73	7.77	29.28
04-Dec-23 06:00:00	52.37	7.67	3133.49	7.77	29.26
04-Dec-23 07:00:00	52.12	7.66	3141.01	7.78	29.24

GBL CT Blowdown water parameter

Date	CT B/D Water Flow (T/Hr)	pH	Conduct. (uS/CM)	D.O. (mg/l)	CT B/D discharge Temp. (Deg C)
04-Dec-23 08:00:00	52.07	7.65	3136.39	7.78	29.23
04-Dec-23 09:00:00	51.98	7.63	3131.78	7.79	29.21
04-Dec-23 10:00:00	51.84	7.62	3127.16	7.79	29.19
04-Dec-23 11:00:00	51.70	7.61	3122.55	7.80	29.18
04-Dec-23 12:00:00	51.55	7.60	3117.93	7.80	29.17
04-Dec-23 13:00:00	51.41	7.60	3113.31	7.80	29.18
04-Dec-23 14:00:00	51.34	7.60	3108.70	7.85	29.20
04-Dec-23 15:00:00	51.27	7.59	3104.23	7.85	29.21
08-Dec-23 01:00:00	51.98	7.79	2998.28	7.30	29.85
08-Dec-23 02:00:00	52.22	7.74	2999.16	7.30	29.82
08-Dec-23 03:00:00	52.02	7.74	3000.04	7.30	29.79
08-Dec-23 04:00:00	51.89	7.73	3000.92	7.30	29.75
08-Dec-23 05:00:00	51.74	7.72	3001.80	7.30	29.72
08-Dec-23 06:00:00	51.60	7.72	3002.68	7.30	29.68
09-Dec-23 19:00:00	52.82	7.90	3078.48	8.40	30.28
09-Dec-23 20:00:00	52.75	7.88	3077.88	8.52	30.27
09-Dec-23 21:00:00	52.65	7.87	3077.28	8.52	30.26
09-Dec-23 22:00:00	52.54	7.85	3076.68	8.53	30.25
09-Dec-23 23:00:00	52.46	7.83	3076.08	8.54	30.24
10-Dec-23 00:00:00	52.29	7.82	3075.48	8.55	30.23
10-Dec-23 01:00:00	52.10	7.82	3074.87	8.61	30.22
10-Dec-23 02:00:00	52.00	7.83	3074.27	8.61	30.21
10-Dec-23 03:00:00	51.92	7.83	3073.91	8.61	30.20
10-Dec-23 04:00:00	51.83	7.83	3074.25	8.61	30.19
10-Dec-23 05:00:00	51.74	7.83	3074.60	8.77	30.18
10-Dec-23 06:00:00	51.64	7.83	3074.94	8.77	30.16
10-Dec-23 07:00:00	51.48	7.82	3075.28	8.90	30.15
10-Dec-23 08:00:00	51.45	7.81	3075.63	8.90	30.14
10-Dec-23 09:00:00	51.37	7.80	3075.97	8.90	30.13
10-Dec-23 10:00:00	51.22	7.79	3076.32	8.90	30.11
10-Dec-23 11:00:00	50.99	7.78	3076.19	8.90	30.11
10-Dec-23 12:00:00	50.76	7.77	3075.14	8.90	30.13
10-Dec-23 13:00:00	50.59	7.75	3074.09	8.90	30.15
14-Dec-23 15:00:00	51.17	7.75	2967.48	7.50	31.50
14-Dec-23 16:00:00	51.42	7.75	3057.02	7.50	31.50
14-Dec-23 17:00:00	51.36	7.74	3082.29	7.61	30.19
14-Dec-23 18:00:00	51.22	7.74	3084.38	7.61	30.18
14-Dec-23 19:00:00	51.11	7.73	3086.47	7.72	30.17
14-Dec-23 20:00:00	51.00	7.73	3088.56	7.72	30.16
14-Dec-23 21:00:00	50.89	7.72	3090.65	7.72	30.15
14-Dec-23 22:00:00	50.78	7.72	3092.74	7.72	30.15
14-Dec-23 23:00:00	50.64	7.74	3094.83	7.72	30.14
15-Dec-23 00:00:00	50.54	7.75	3098.61	7.72	30.13
15-Dec-23 01:00:00	50.44	7.77	3114.45	7.72	30.11
15-Dec-23 02:00:00	50.33	7.80	3130.29	7.72	30.04
15-Dec-23 03:00:00	50.21	7.82	3146.13	7.72	29.96
15-Dec-23 04:00:00	50.09	7.82	3160.96	7.72	29.89
15-Dec-23 05:00:00	50.00	7.83	3169.59	7.72	29.81

GBL CT Blowdown water parameter

Date	CT B/D Water Flow (T/Hr)	pH	Conduct. (uS/CM)	D.O. (mg/l)	CT B/D discharge Temp. (Deg C)
15-Dec-23 06:00:00	49.92	7.83	3178.23	7.72	29.74
15-Dec-23 07:00:00	49.96	7.83	3186.86	7.72	29.67
17-Dec-23 09:00:00	52.39	7.93	3039.12	8.12	30.63
17-Dec-23 10:00:00	52.59	7.93	3076.51	8.12	30.61
17-Dec-23 11:00:00	52.47	7.92	3084.92	8.12	30.59
17-Dec-23 12:00:00	52.35	7.91	3084.37	8.12	30.57
17-Dec-23 13:00:00	52.23	7.91	3081.52	8.12	30.55
17-Dec-23 14:00:00	52.10	7.90	3078.67	8.12	30.53
17-Dec-23 15:00:00	51.89	7.89	3075.82	8.02	30.51
17-Dec-23 16:00:00	51.74	7.89	3072.97	8.02	30.49
17-Dec-23 17:00:00	51.66	7.88	3070.11	8.02	30.48
17-Dec-23 18:00:00	51.59	7.88	3067.26	8.02	30.48
17-Dec-23 19:00:00	51.51	7.87	3064.41	8.02	30.47
17-Dec-23 20:00:00	51.44	7.87	3063.91	8.02	30.47
17-Dec-23 21:00:00	51.37	7.86	3063.51	8.02	30.46
20-Dec-23 00:00:00	52.44	8.02	2906.72	6.75	30.74
20-Dec-23 01:00:00	52.47	8.02	2984.25	7.12	30.77
20-Dec-23 02:00:00	52.40	8.02	3023.59	7.12	30.80
20-Dec-23 03:00:00	52.34	8.03	3027.77	7.12	30.83
20-Dec-23 04:00:00	52.28	8.03	3030.75	7.56	30.86
20-Dec-23 05:00:00	52.22	8.04	3033.73	7.56	30.89
20-Dec-23 06:00:00	52.19	8.04	3033.60	7.56	30.92
20-Dec-23 07:00:00	52.18	8.04	3031.65	7.56	30.95
20-Dec-23 08:00:00	52.08	8.05	3029.70	7.56	30.98
20-Dec-23 09:00:00	51.97	8.05	3027.75	7.56	31.00
20-Dec-23 10:00:00	51.87	8.06	3025.80	7.56	31.02
20-Dec-23 11:00:00	51.77	8.06	3023.85	7.56	31.04
20-Dec-23 12:00:00	51.69	8.07	3021.90	7.56	31.06
20-Dec-23 13:00:00	51.62	8.07	3019.95	7.56	31.08
20-Dec-23 14:00:00	51.53	8.06	3020.56	7.56	31.10
20-Dec-23 15:00:00	51.37	8.06	3021.84	7.56	31.13
20-Dec-23 16:00:00	51.22	8.05	3023.13	7.56	31.11
20-Dec-23 17:00:00	51.07	8.04	3024.41	7.56	31.05
20-Dec-23 18:00:00	50.92	8.03	3025.69	7.56	30.98
20-Dec-23 19:00:00	50.90	8.01	3026.98	7.56	30.92
22-Dec-23 17:00:00	51.70	8.24	3066.71	12.00	30.44
22-Dec-23 18:00:00	51.66	8.25	3090.87	12.00	30.40
22-Dec-23 19:00:00	51.61	8.27	3099.49	12.00	30.35
22-Dec-23 20:00:00	51.56	8.29	3088.57	12.00	30.31
22-Dec-23 21:00:00	51.51	8.31	3077.66	12.00	30.27
22-Dec-23 22:00:00	51.46	8.32	3066.74	12.00	30.23
22-Dec-23 23:00:00	51.37	8.34	3055.83	12.00	30.19
23-Dec-23 00:00:00	51.25	8.36	3044.91	10.51	30.15
23-Dec-23 01:00:00	51.20	8.37	3034.00	10.51	30.08
23-Dec-23 02:00:00	51.25	8.39	3022.92	10.51	30.01
23-Dec-23 03:00:00	51.28	8.40	3008.18	10.51	29.93
23-Dec-23 04:00:00	51.13	8.42	2993.43	10.51	29.86
23-Dec-23 05:00:00	50.99	8.43	2978.68	10.51	29.78

GBL CT Blowdown water parameter

Date	CT B/D Water Flow (T/Hr)	pH	Conduct. (uS/CM)	D.O. (mg/l)	CT B/D discharge Temp. (Deg C)
23-Dec-23 06:00:00	50.88	8.44	2963.94	10.51	29.70
23-Dec-23 07:00:00	50.80	8.46	2949.19	10.51	29.63
23-Dec-23 08:00:00	50.76	8.47	2934.44	8.95	29.55
23-Dec-23 09:00:00	50.73	8.48	2919.70	8.96	29.54
23-Dec-23 10:00:00	50.63	8.48	2904.93	8.96	29.53
23-Dec-23 11:00:00	50.54	8.48	2890.06	8.96	29.53
25-Dec-23 21:00:00	51.76	8.53	2887.57	7.80	28.76
25-Dec-23 22:00:00	51.56	8.52	2942.79	7.80	28.86
25-Dec-23 23:00:00	51.39	8.50	2967.91	7.80	28.91
26-Dec-23 00:00:00	51.24	8.49	2976.63	7.80	28.96
26-Dec-23 01:00:00	51.12	8.48	2985.35	7.80	29.01
26-Dec-23 02:00:00	51.12	8.49	2994.07	7.80	28.98
26-Dec-23 03:00:00	51.09	8.50	3002.79	7.80	28.96
26-Dec-23 04:00:00	50.97	8.51	3011.52	7.80	28.93
26-Dec-23 05:00:00	50.81	8.52	3020.24	7.80	28.90
27-Dec-23 04:00:00	52.35	8.44	3061.33	7.14	29.05
27-Dec-23 05:00:00	52.94	8.42	3065.31	7.14	29.06
27-Dec-23 06:00:00	52.91	8.40	3069.30	7.15	29.07
27-Dec-23 07:00:00	52.70	8.39	3059.96	7.15	29.08
27-Dec-23 08:00:00	52.65	8.38	3048.25	7.15	29.08
27-Dec-23 09:00:00	52.66	8.37	3036.55	7.15	29.09
27-Dec-23 10:00:00	52.61	8.36	3024.85	7.16	29.10
27-Dec-23 11:00:00	52.51	8.35	3013.15	7.16	29.13
27-Dec-23 12:00:00	52.41	8.34	3001.45	7.16	29.17
27-Dec-23 13:00:00	52.31	8.33	2989.74	7.17	29.21
27-Dec-23 14:00:00	52.28	8.33	2978.02	7.17	29.26
27-Dec-23 15:00:00	52.26	8.32	2964.50	7.18	29.30
27-Dec-23 16:00:00	52.23	8.32	2950.97	7.18	29.35
27-Dec-23 17:00:00	52.20	8.32	2937.44	7.19	29.39
27-Dec-23 18:00:00	52.19	8.31	2923.92	7.19	29.43
27-Dec-23 19:00:00	52.02	8.31	2942.06	7.20	29.46
27-Dec-23 20:00:00	51.85	8.31	2937.10	7.20	29.48
27-Dec-23 21:00:00	51.79	8.30	2930.52	7.20	29.50
27-Dec-23 22:00:00	51.72	8.29	2923.95	7.26	29.52
27-Dec-23 23:00:00	51.59	8.27	2917.37	7.52	29.55
28-Dec-23 00:00:00	51.48	8.25	2902.40	7.52	29.57
28-Dec-23 01:00:00	51.40	8.24	2886.26	7.52	29.57
28-Dec-23 02:00:00	51.33	8.22	2877.47	7.52	29.57
28-Dec-23 03:00:00	51.26	8.20	2868.69	7.52	29.57
28-Dec-23 04:00:00	51.19	8.19	2859.90	7.52	29.58
28-Dec-23 05:00:00	51.11	8.17	2851.12	7.60	29.52
28-Dec-23 06:00:00	51.05	8.16	2842.11	7.60	29.42
28-Dec-23 07:00:00	51.04	8.14	2829.23	7.72	29.31
31-Dec-23 03:00:00	51.82	7.85	3034.06	8.31	29.80
31-Dec-23 04:00:00	51.81	7.85	3073.47	8.31	29.70
31-Dec-23 05:00:00	51.71	7.85	3086.42	8.31	29.60
31-Dec-23 06:00:00	51.63	7.84	3097.54	8.31	29.50
31-Dec-23 07:00:00	51.56	7.84	3108.67	8.03	29.40

GBL CT Blowdown water parameter

Date	CT B/D Water Flow (T/Hr)	pH	Conduct. (uS/CM)	D.O. (mg/l)	CT B/D discharge Temp. (Deg C)
31-Dec-23 08:00:00	51.49	7.83	3112.77	8.03	29.30
31-Dec-23 09:00:00	51.40	7.83	3113.62	8.03	29.20
31-Dec-23 10:00:00	51.29	7.83	3114.47	8.03	29.10
31-Dec-23 11:00:00	51.19	7.83	3115.32	7.95	29.06
31-Dec-23 12:00:00	51.08	7.82	3114.78	7.95	29.03
31-Dec-23 13:00:00	50.99	7.82	3104.55	7.95	29.00
31-Dec-23 14:00:00	50.90	7.82	3091.37	7.95	28.97
31-Dec-23 15:00:00	50.80	7.82	3077.16	7.95	28.94
31-Dec-23 16:00:00	50.70	7.82	3075.83	7.95	28.91
31-Dec-23 17:00:00	50.57	7.82	3074.66	7.95	28.88
31-Dec-23 18:00:00	50.53	7.82	3073.49	7.95	28.85
min	2.92	6.57	2598.00	5.32	28.42
max	53.07	8.53	3440.00	12.50	33.64

ภาคผนวก ข-15

แนวทางการดำเนินการในกรณีที่คุณภาพน้ำทิ้งจากหอหล่อเย็นไม่เป็นไปตามค่ามาตรฐานที่กำหนด

แนวทางการดำเนินการในกรณีที่คุณภาพน้ำทิ้งจากหอหล่อเย็นไม่เป็นไปตามที่มาตรฐานกำหนด

ลำดับ	Flow Diagram	ผู้รับผิดชอบ	หมายเหตุ
1	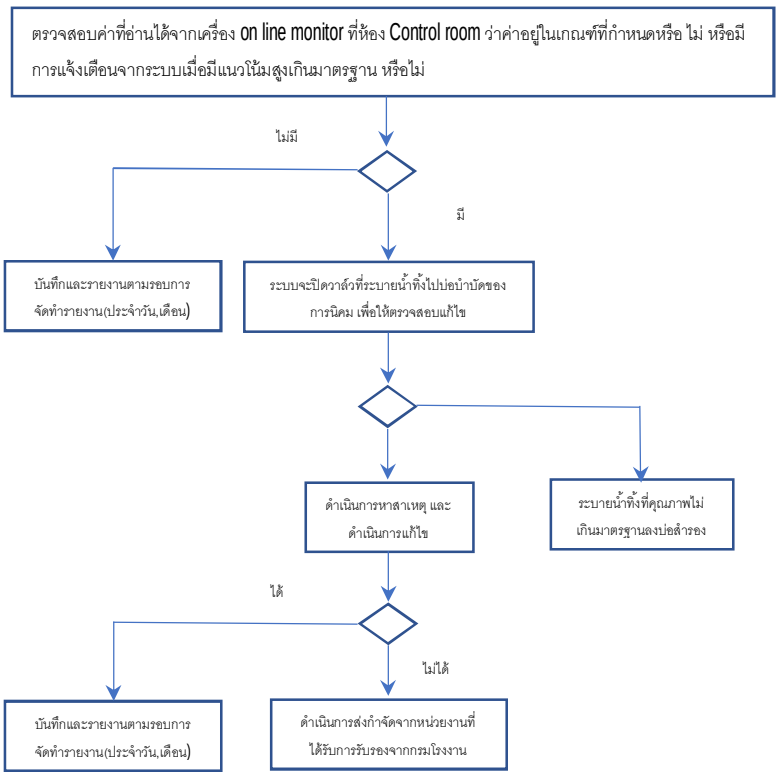	Shift leader	-อัตราการไหล ของน้ำทิ้งเมื่อเปิดวาล์ว จะไม่นำค่ามาวิเคราะห์ถ้าไม่มีอัตราการไหล - DO > 4 - pH 5.5 – 9 - conductivity <3500 us/cm - Temperature < 34-degree C.
2		Shift leader	- กรณีที่มีค่าควบคุมค่าใดค่าหนึ่งเกินมาตรฐาน ระบบจะปิด วาล์วที่จ่ายน้ำไปบ่อบำบัดน้ำเสียของการนิคมอัตโนมัติ เพื่อให้ทำการตรวจสอบ หรือ แก้ไข - รายงานตามรูปแบบที่บริษัทฯ กำหนด
3		Shift leader/ Maintenance	-การแจ้งตรวจสอบ/ซ่อมในระบบ SAP - รายงานตามรูปแบบที่บริษัทฯ กำหนด - ใช้บ่อสำรองกรณีมีน้ำทิ้งจากหอหล่อเย็นที่คุณภาพไม่เกินค่ากำหนด
4		Shift leader/ Maintenance	- กรณีที่เกิดจากเครื่องมือวัดค่า error ให้ดำเนินการสอบเทียบใหม่ และตรวจสอบค่าจากห้อง Lab ของโรงไฟฟ้าหลัจากนั้นถ้าเครื่องมือวัดปรกติแล้ว ค่อยระบายน้ำออก - กรณีที่คุณภาพน้ำเกินมาตรฐานไม่สามารถแก้ไขได้ให้จัดจ้างส่งกำจัดจากหน่วยงานที่ได้รับอนุญาต
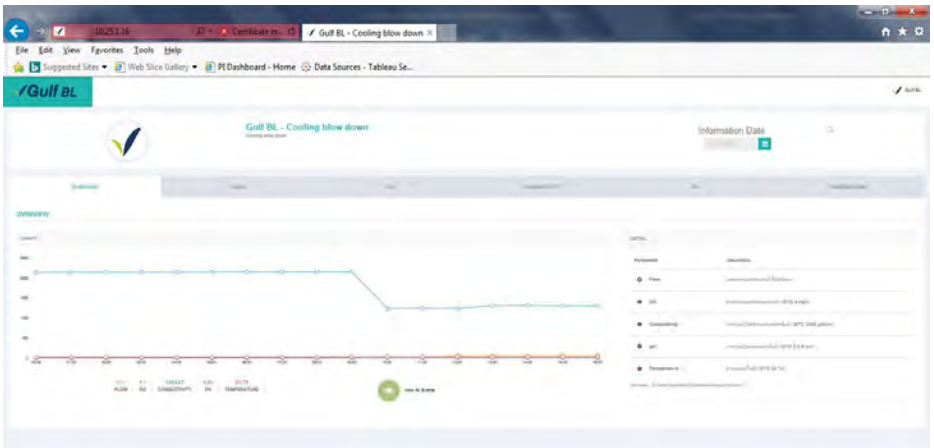
ภาพแสดงหน้าจอที่ห้องควบคุมใช้สำหรับใช้ตรวจสอบ